Model Mechanics

March 1979 45p
(U.S.A & Canada $2.00)

MAP HOBBY MAGAZINE

The NEW MAGAZINE for model making enthusiasts

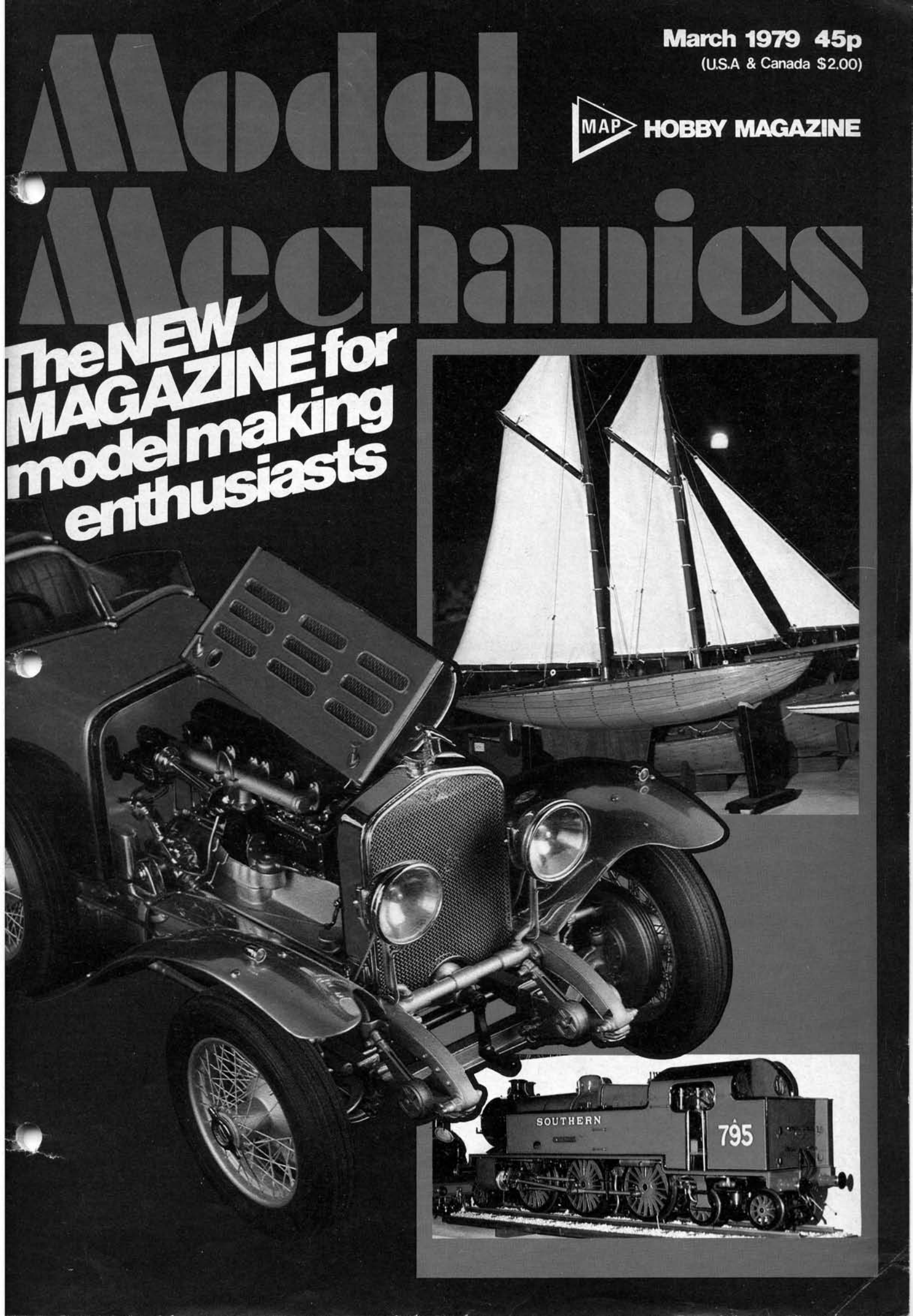

MODELLERS! SAVE £££'s

with PROOPS

Gears, pulleys, motors, power units, mechanical and electrical components

We're sure you will find the items featured here of interest, but to get a more comprehensive view of our range of products, visit our shop at **52 TOTTENHAM COURT ROAD, LONDON, W.1** (Open 9 am to 6 pm Monday to Saturday inclusive). This is truly a Mecca for Modellers, with a far-ranging and continually changing selection of useful and fascinating items for the hobbyist, experimenter and enthusiast. **Barclaycard and Access accepted. Any orders over]5 in value sent post free in U.K.** ***All Mail Orders to: PROOPS BROS. LTD., Dept. MM, The Hyde Industrial Estate, Edgware Road, London NW9 6JS. Tel: 01-205 8006.*** Our Mail Order service is fast and reliable, and we give special attention to the requirements of Schools, Colleges, Universities and Modelling Societies.

•220/240 Volt A.C. Motor & Gearbox

£5 p&p 90p

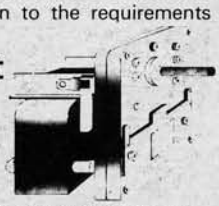

Shaded pole type motor, gear box with steel gears. Approx. size 93 × 75 × 18 mm. deep. Shaft length approx. 26 mm., diam. 8 mm. Available with final drive shaft speed of 20 r.p.m., 60 r.p.m. or 100 r.p.m. State requirements.

•ROBUST 12 Volt 2.5A. D.C. Motor

£2.50 p&p 60p

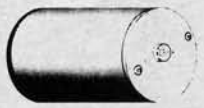

Approx. dimensions 74 × 60 mm. diam. Shaft length approx. 6 mm. × 2 mm. diam.

Manufactured by Crouzet. 3600 r.p.m.

• MODEL MOTOR 12v.

Johnson Type 333.

Approx. 1¼in. long x 1in. diam. Spindle ½in. long x 1/16in. diam.

75p carr. & pkg. 15p

• AC/DC POWER UNIT

£1.50

carr. & pkg. 35p

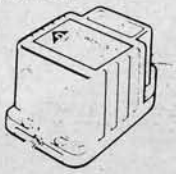

Compact versatile unit in plastic case, suitable for a wide variety of modelling applications; power for small motor, miniature lighting circuits, etc. Input 220/240v A.C. 50 Hz. Output 12v 0.3a D.C.; 15v 0.5a A.C. Double insulated and fitted with Thermal Overload Cut-out. Size approx. 3 x 2 x 2 in. Approx. 8 ft. twin core mains lead.

• BEARINGS,

precision made, three types. Type 11, 5/8in. o.d. x ¼in. i.d. fully shrouded; Type 16, ¾in. o.d. x 3/16in. i.d. self-centering; Type 4, 5/8in. o.d. x 3/8in. i.d. x 7/8in. long, needle bearing. Pack of any four bearings (state requirements)

£1 p.&p. 15p

• ELECTRIC CLOCK TIMER

£1.75 Carr. & pkg. 55p

Mains operated electric clock powered by 3w. synchronous motor and engineered to the highest standards of reliability. Makes a useful timepiece but originally intended as a cooker time switch. Can be used in dozens of control situations, such as converting radios to clock radios, switching on lighting, process timing, etc. Switches up to 25A 230/240v. AC 50 Hz and can be pre-set to allow once on / once off switching in a 5-hour period.

• MAKE SCENERY, TRACKSIDE BUILDINGS

99p

carr. & pkg. 25p

Clean, easy and fun to use! Carves expanded polystyrene tiles, sheets or blocks up to 2in. thick like a knife through butter! No pressure needed, no hard work! Just connect to 4½v. battery and push button. Cut out and shape buildings, scenery for the railway modeller, wall decorations, toys, plaques, etc. Packs of 3 Spare Wires 15p ea., p&p 10p.

• GEAR SET

£1.75 carr. & pkg. 25p

40dp white nylon matching gears, with two interlocking racks and 3v. motor with drive shaft to suit. Set comprises 5 gears (number of teeth shown in brackets), 40mm dia. (60); 33mm (50); 27mm (40); 20mm (30); 14mm (20); one pinion 7mm (10); two racks 103mm long (50); 3 x 115mm lengths shafting plus 3v. motor 35mm overall length x 24mm dia. with 7mm long drive shaft. All dimensions approx.

• PULLEY SET

£1.75 carr. & pkg. 25p

All modeller needs to make up fascinating step-up, step-down, reverse motion pulley mechanisms. Set of 8 white nylon pulley wheels, consisting of two 30mm dia. two 20mm dia. and four 11mm dia., i.e. in a ratio of approx. 1:2:3. 16 interchangeable bosses also supplied for making up fixed or loose, single or double, pulleys, together with suitable shafting and driving bands. PLUS a 3v. D.C. motor complete with mounting brackets and screws to power your model. Full instructions and illustrated examples included.

•MULTITESTER

£4.95 p&p 25p

A beautifully made multitester at a price that won't hurt, useful for dozens of jobs round the modeller's bench.

Covers AC VOLTS 0-15 — 150 — 500 — 1000
DC VOLTS 0-15 — 150 — 500 — 1000
DC CURRENT 0-1 — mA — 15 mA — 150mA
RESISTANCE 0 — 100 Kohms.

Size approx. 90 × 61 × 30 mm.

• SOLDERING IRONS

12 VOLT 15 watt **£2.95** p&p 25p
240 VOLT 45 watt **£3.75** p&p 25p

• PRECISION SCREWDRIVER KIT

£2.40 p&p 25p

Set of six screwdrivers, nicely presented in hinged plastic case. Head sizes: 0.8 mm — 1.4 mm — 2 mm — 2.4 mm — 2.9 mm — 3.8 mm.

• MOIRE PATTERNS in colours!

Proops Moire Pattern Kit No. 1 contains full-size reproductions of eight basic patterns reproduced in black, red, yellow and blue on thick clear acetate sheeting and in black on heavy opaque coated white card. Also included is a grid reproduced in black.

PRICE **£3.50** Carr. & pkg. 30p

Also available — Proops Moire Pattern Kit No. 2, containing single radial pattern set 8¾in. dia. in primary colours and black.

Carr. & pkg. 30p **£1.95**

• FRESNEL LENSES

two for £1.70 carr. & pkg. 30p

Supplied as two separate lenses or mounted together as condenser assembly — state preference. Slightly imperfect but entirely suitable for IMAGE BRIGHTENERS, MAGNIFIERS, INTENSIFIERS. Precision worked in optical plastic, these flat lenses, 11in. square x 3mm thick provide an amazingly large area of magnification.

PROOPS BARGAIN PACKS

£1 EA. plus p+p

Useful selections of a wide range of materials, components, etc., in convenient packs. Please note you must send £1 for each pack you order, plus the p.& p. indicated against each item. Any five packs sent post free U.K.

SELF TAPPING SCREWS: A generous 1 lb. mixture of about 500 screws in useful sizes and lengths from ¼ in., various heads. p&p 50p.

STEEL WASHERS. About 500 in a useful 20 oz. pack that every tool box needs. p&p 50p.

SHAKEPROOF AND STAR WASHERS. About 500 in a good, varied selection of sizes, weighing 6 oz. p&p 20p.

HOSECLIPS. Pack of 25 in assorted sizes from 7/8 in. p&p 25p.

SPACERS. Pack of approx. 100; good selection of useful sizes, various lengths and diams. p&p 25p.

CROC CLIPS. Pack of 16 1½ in. long. p&p 15p.

SPADE AND RING CONNECTORS. As used in cars and domestic appliances. Pack of approx. 100 connectors. Balanced selection, insulated and plain. p&p 25p.

SPRINGS. Generous and varied selection, compression and expansion springs, lengths from approx. ½ in. to 2½ in. and diameters from 3/16 in. to 1½ in. Pack of approx. 100. p&p 25p.

PLASTIC TERMINAL BLOCKS. 5A, 2 way. Pack of 20. p&p 20p.

BOWDEN CABLE. Miniaturised cable ideal for modellers, control gear, etc. Sheath approx. 1mm o/d 2 x 3 ft. (approx.) lengths. p&p 20p.

CASTORS. 1 in. diam., 2 hole fixing. Pack of 8. p&p 35p.

COPPER TUBING. Approx. 4½ in. lengths formed into elbows approx. 6mm o/d x 4mm i/d. Pack of 20. p&p 25p.

TRANSFORMER. Double wound 240v. input, 12v. 200 mA output. Size approx. 1⅞ in. x 1¾ in. x 1⅞ in. Pack of 2. p&p 55p.

PRESSURE GAUGE. 0-60 psi, calibrated 0-4 atmospheres. Approx. 1⅞ in. diam. with ⅛ in. BSP connection back entry. Pack of 2. p&p 15p.

POLARISING FILM. Approx. 6 in. x 3 in. x .03 in. thick full wave, linear polarising. p&p 15p.

LIGHT GUIDES. Yes, you can 'Bend' light round corners with these high quality glass fibre optics. 1mm active area 2 metres. p&p 15p. OR 2mm. active area 1 metre. p&p 15p.

SPIRE NUTS AND CLIPS. Generous selection, approx. 12 oz. assorted sizes. p&p 35p.

MICROSWITCHES. Good selection six types, make, break and changeover. p&p 25p.

MAINS NEONS in plastic holders with leads and resistors. Pack of 5. p&p 15p.

MAINS NEONS, miniature type, pack of 10. p&p 15p.

MAINS NEONS, pack of 20, with plastic "panel jewels". p&p 15p.

MIXED SLEEVING. Good selection of various cut lengths and sizes, inc. 2 x 25 yd. lengths Vidaflex. 1.5mm bore. p&p 30p.

MULTICORE CABLE. Approx. 5mm o.d. each core contains 7 strands. 15 metre pack of 4 core, or 12 metre pack of 6 core, or 10 metre pack of 8 core. Each pack £1 plus 25p p&p. State requirements.

CHANGEOVER REED RELAY with 12 volt operating coil and two additional Reed Switches. p&p 20p.

MODEL MOTORS 1½ to 4½ volts. Fantastic bargain! Pack of six motors, three of each of two types. Compact, hardworking and versatile d.c. units that will provide a satisfactory power source in many types of model. p&p 20p.

ALPHABET KIT. Play word games and have fun with one of these 184 piece kits. Kits comprise 144 gaily coloured plastic capital letters 1½ in. high and 40 numerals 1 in. high plus signs. Ideal for clubs, shops, pubs, for indoor or outdoor signs with letters cemented to board.

COPPER RIVETS size approx. 11/16 in. × 3/32 in. Approx. 1 lb. p&p 50p.

SAVE MORE!
ORDER FIVE PACKS AND WE'LL SEND THEM POST FREE U.K.!

Model Mechanics

VOLUME 1 Number 2 MARCH 1979

Cover picture: Three models at their very best.
The Hispano Suiza car, Sailing Schooner reminiscent of Bill Daniels, and a Southern 2-6-4T River Class loco.

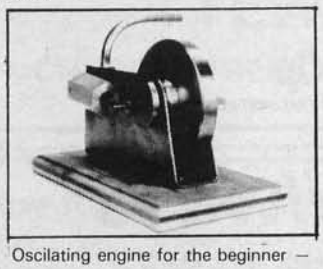

Oscilating engine for the beginner —

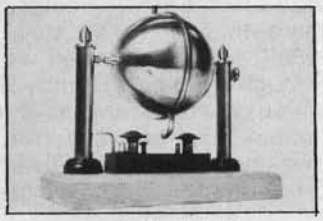

Instructions for Hero's Engine.

CONTENTS

Second-class postage rates paid at New York, U.S.A. Registered at the Post Office for transmission by Canadian Post. American enquiries regarding news stand sales and advertising should be sent to MODEL MECHANICS, Eastern News Distributors Inc., 111 Eighth Avenue, New York, N.Y. 10011, U.S.A.

Enquiries regarding Hobby Shop Sales to Bill Dean Books Ltd., 166-41, Powell's Cove Boulevard, Whitestone, New York 11357, U.S.A. Telephone: (212) 767-6632.

Model & Allied Publications Ltd

Editorial and Advertisement Offices: **P.O. Box 35, Hemel Hempstead, Herts, HP1 1EE**
Tel: Hemel Hempstead — Editorial/Advertising 41221

The Editor is pleased to consider contributions for publication in "Model Mechanics". Manuscripts should be accompanied if possible by illustrations and should also have a stamped addressed envelope for their return if unsuitable. While every care is taken, no responsibility can be accepted for unsolicited manuscripts, photographs, art work, etc.

Subscription department:
Remittances to **Model & Allied Publications Ltd.**, P.O. Box 35, Hemel Hempstead, Herts. HP1 1EE (Subscription Queries Tel: 0442 51740).
Subscription Rate: £7.50 ($15.00).

MAP

Also published by MAP: Model Engineer; Aeromodeller; Model Boats; Radio Control Models & Electronics; Model Railways; Scale Models; Military Modelling; Woodworker; Gem Craft; Clocks.

Model Mechanics is printed in Great Britain by New Avenue Press, Feltham, Middx., Mono Origination and Phototypesetting by Derek Croxson Ltd., Chesham, Bucks, for the proprietors and publishers, Model & Allied Publications Ltd. (a member of the Argus Press Group), 13/35 Bridge Street, Hemel Hempstead, Herts. Trade sales by Argus Distribution Ltd., 12/18 Paul Street, London, E.C.2, to whom all trade enquiries should be addressed.

M.M. QUERY COUPON
MARCH
1979

The RODNEY PLUS

Vertical Milling and Drilling Machine

8 Spindle Speeds
320 R.P.M.
450 R.P.M.
610 R.P.M.
850 R.P.M.
1040 R.P.M.
1490 R.P.M.
2190 R.P.M.
2750 R.P.M.

Fine Feed Worm disengages for Direct Drilling Feed

Robust ¾ h.p. motor

Totally enclosed drive

Sealed ballraces throughout

Price £595
H.P. arranged

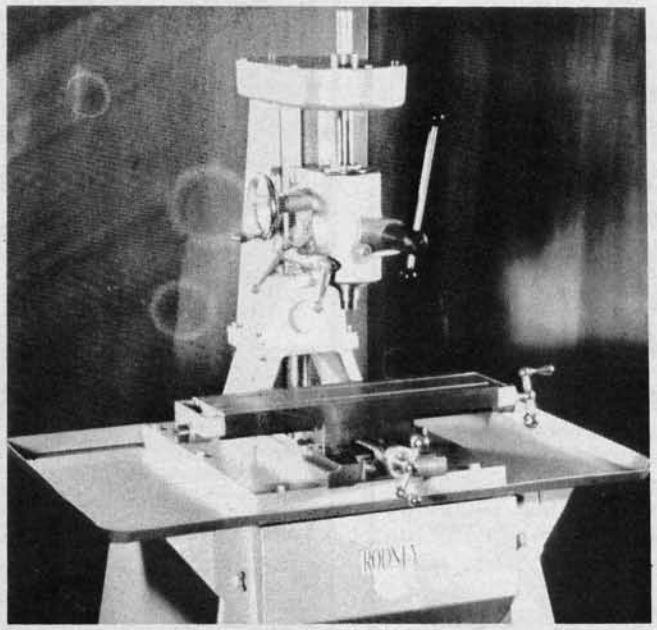

Capacity:

Throat Depth	$4\frac{7}{8}''$
Max height under spindle	$6\frac{5}{8}''$
Max. height under cutter	(Approx.) $5\frac{5}{8}''$
Table size	15" x 4¼"
Longitudinal Travel	10"
Cross Travel	4½"

Indexes in ·001" All Directions

No. 2 Morse Taper Spindle

Accepts "Myford" collets and nose cap

Height 66" approx.
Width 30"
Depth 22"

TEW MACHINERY LIMITED

CHURCH STREET, COGENHOE, NORTHAMPTON **Telephone: 0604 891050**

NEW TOOLS DISPATCHED BY RETURN POST FROM OUR LARGE STOCKS

We welcome ACCESS, BARCLAYCARD customers — please quote your number.

All prices include VAT. UK orders post free. Overseas orders post extra.

Screw cutting and setting gauge for use in lathe
Our Price **£1.00 each**

M.E. Taps. One each size, $\frac{1}{8}''$, $\frac{5}{32}''$, $\frac{3}{16}''$, $\frac{7}{32}''$, ¼" x 40 T.P.I.
Our Price **£2.50 for five**

M.E. Dies to suit above taps $\frac{13}{16}''$ standard diameter.
Our Price **£4.00 for five**

Mitutoy Vernier Caliper. Capacity 5". Reading Engoish and metric. Very clear to read. Pearl chrome finish.
Our Price **£17.00 each**

Sets Small Steel G Cramp. Sets of three with largest capacity 1½". Suitable for the model maker. Our Price **£1.25 a set**

Endmills. Four flute with straight shank which can be held in 3 jaw lathe chuck for light milling. SPECIAL OFFER: One each size $\frac{1}{8}''$, $\frac{3}{16}''$, ¼" and $\frac{3}{8}''$ — **£5.20 the four.**

Slot Drills. Two flute for milling slots, etc., these can be fed straight into shafts when cutting keyways, etc., one each size $\frac{3}{32}''$, $\frac{1}{8}''$, $\frac{3}{16}''$ and ¼" — **£5.50 the four.**

Live (Revolving) lathe centres No. 2 M.T. Our Price **£14.00 each**

Set of 12 lathe tools, 18% high speed steel — size of shank $\frac{5}{16}''$ sq. All suitable for use with Myford four way tool post. One each RH roughing, ext screw cutting, RH facing, RH knife, LH facing, LH knife, parting, int. screwcutting, int. boring, int. undercutting round nose front roughing, roughing tool.
Our Price per set of 12 **£18.80**

WISHBONE DRILL SHARPENER DESIGNED TO ENABLE ANYONE WITHOUT SPECIAL SKILL TO RESTORE BLUNT AND BROKEN DRILLS IN A FEW MINUTES. SUPPLIED AS A COMPLETE KIT IN BOX WITH INSTRUCTIONS. Suitable for small drills up to $\frac{1}{8}''$ Our Price **£4.50**

Shop Hours 9 a.m. — 5 p.m. Thurs. and Sat. close 1 p.m.
Closed 1—2 p.m. lunch

Drill Stands Polystyrene
Fraction stands $\frac{1}{16}''$ — ½" 29 drills **66p each**
Number stands 1—60 for 60 drills **66p each**

Best Quality Centre Drills. British made, one of each size $\frac{1}{8}''$, $\frac{3}{16}''$ and ¼". Our Price **£1.50 for three**

High Speed Steel
Square Tool Bits "Moly" Grade

Size of Square	$\frac{1}{8}''$	$\frac{3}{16}''$	¼"	$\frac{5}{16}''$	$\frac{3}{8}''$
Length	1½"	1½"	2"	2½"	3"
Price each	**32p**	**32p**	**46p**	**70p**	**95p**

Drill Grinding Attachment for fast and accurate sharpening of drills sizes $\frac{1}{8}''$ — ¾" diameter. The jig has 5 included angles suitable for various materials for use with bench grinder. Boxed compete with full and clear instructions. Our Price **£5.10**

Sets Tungsten Carbide $\frac{3}{8}''$ square lathe tools already ground to shape and ready for general use, one each round nose facing, straight round nose finishing, bar turning, parting tool.
Our Price set of four tools **£5.25**

H.S.S. Metal Slitting Saws — All 1" Bore Suitable for use on a Lathe

Dia.	3"	3"	3"	3"	3"	3"
Width	$\frac{1}{32}''$	$\frac{3}{64}''$	$\frac{1}{16}''$	$\frac{5}{64}''$	$\frac{3}{32}''$	$\frac{1}{8}''$
Price	**£3.30**	**£3.30**	**£3.70**	**£4.05**	**£4.40**	**£5.15**

A. E. KING (TOOLS) LTD

3 CENTRAL PARADE, STATION ROAD
SIDCUP, KENT DA15 7DL
TELEPHONE: 01-300 1342

ROAD & RAIL

330 Marsh Lane, Erdington,
Birmingham B23 6JD
Phone 021-382 3481

Hornby service, spares & repairs. Mainline, Lima, Airfix, Romford, Ratio, Peco, Hammant & Morgan Ks kits. Badger Airbrushes, Building kits, Brick Papers, Linka kits, Scenic materials. *Also,* **LGB loco's, rolling stock & track.**

Access & Barclaycard

Open every day except Sunday 9.30-6.30 p.m. Car park outside shop.

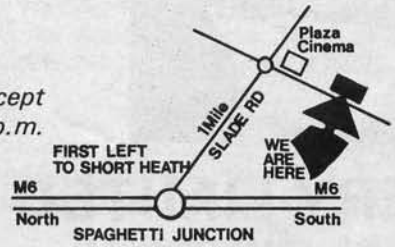

24 hour Mail order service ring 021-373 5945

EXPO DRILLS

the miniature tools that do a man-sized job!

Real power, real versatility, real safety — compact, easy-to-use British made Expo 12-volt drills give you top performance at minimum cost for model making, electronics, lapidary, prototype development or small-scale production.

Home & Export Trade enquiries welcome

GET EXPO POWER AT EXPO PRICES!

Basic Titan drill (torque 350g/cm)	£9.79
Basic Reliant drill (torque 35g/cm)	£6.34
Drill kits (basic drill plus selection of tools and accessories)	from £8.25 to £42.85
Transformer rectifier units	from £9.40
All metal drill stand (convertible for use as lathe)	£11.66

Prices exclude VAT and post and packing

Ask your local dealer for full details of the complete Expo range of power tools and accessories or write direct to the manufacturers.

EXPO (DRILLS) LTD
Unit 10, Sustanum Works, Titchfield, Hants.
Telephone: 03294-41752

The LINSAW will cut materials other saws won't even scratch

HARDENED & HIGH SPEED STEEL • TUNGSTEN • STELLITE • GLASS • PORCELAIN • MASONRY

FITS STANDARD HACKSAW FRAME

This sawblade enables precise intricate cuts in a very wide range of hard, very hard and brittle materials. This is an invaluable and long lasting tool for engineer, D.I.Y. and builder

PLEASE NOTE We are stockists of the ASBO all purpose drill bit, also for MASONRY-GLASS, porcelain steel, etc. Ask for our full list and brochure.

10 blade £3.98
12 blade £4.30
inc. VAT & Post

LABSCIENCE TECHNICAL SERVICES, 20 Ash Hayes Road Nailsea, Avon. Tel: Nailsea 2866 Bristol 292966

(MM) SEND..... 10" 12" BLADE/S PLEASE TICK
MR./MRS.....
.....
.....
PO/CHEQUE ENCLOSED £.....

LABSCIENCE TECHNICAL SERVICES, 28 Ash Hayes Road Nailsea Avon. Tel: Nailsea 2866 Bristol 292966

MODEL & MINIATURE RAILWAYS
ROCHDALE

120/122 DRAKE STREET · ROCHDALE · LANCS.
Telephone: Rochdale 45657
Shop Hours: Mon., Thurs. 9.30—5.30; Fri. 9.30—7.30; Sat. 9.30—5.00

Model Engineer Supplies

Brass, copper and steel in sheet section, rounds, squares, hexagons and tube. Phosphur bronze, stainless steel and nickel silver. Screws, nuts, washers, rivets, tools, boiler banding, ½ round beadings. Lubricants and adhesives, solders and fluxes. Stockists of Stuart Turner castings and fittings, Myford lathes and accessories and agents for Boxford. 'N', '00' and '0' gauge model railway equipment.

LOCOMOTIVE AND TRACTION ENGINE CASTINGS

3½" Gauge	5" Gauge	7¼" Gauge	1" Scale Traction Engine
ROB ROY	SPEEDY	HOLMSIDE	MINNIE
DORIS	SIMPLEX		
VIRGINIA	PANSY		
TICH	TORQUAY		
JUBILEE	TITFIELD		
BRITANNIA	THUNDERBOLT		
JULIET	NIGEL GRESLEY		
INVICTA	MABEL		
TITFIELD	MAID OF KENT		
THUNDERBOLT	SPRINGBOK		
MAISIE	METRO		
EVENING STAR	LMS FURY & SCOT		
	SUPER CLAUD		
	BRITANNIA		
	KING		

CASTINGS TO BE AVAILABLE FOR THE NEW ENTERPRISE 5" AND COLUMBIA 3½" as the design progresses.

Castings can also be supplied to your own patterns.

MAIL ORDER BY RETURN

CATALOGUE 60p
OVERSEAS £1.00

Editor's Chat

The newcomer to the model making fraternity may be justifiably anxious to produce his or her first effort in as short a time as possible to prove that the capabilities are there. As encouragement right from the start is an obvious necessity, this attitude is fully understandable. And even if we tend to view our creations through rose-tinted glasses — which never seem to be worn by friends, relatives and competition judges — that first model should be a stepping stone to greater efforts.

We all differ slightly in our approach to model engineering. Some of us may wish to have a working model quickly without too much regard to the standard of workmanship. Others build for the love of building alone and the final job serves only to remind them of the happy hours spent at the bench — it may also be, in all probabilities, a competition winner. For the reason that we do differ, it is difficult to suggest to the beginner just what sort of model he should build. Practice is necessary in the basic arts of engineering, filing, using hand and machine tools, etc. But few people would wish to employ the same methods of training used by apprentices in industry. I well remember my own 16 weeks of basic filing exercises and cannot readily suggest such a disagreeable, to me anyway, introduction to what is after all a leisure activity.

There is no doubt that with care and patience a fine model can be turned out by the rawest recruit — it may take him a long time and he may have to ask many questions — but he will do it. I have seen a 3½ inch gauge Britannia locomotive, which is not exactly recommended as a beginner's model, beautifully finished as a first time effort, Keith Wilson, in describing his Bulldog locomotive for Model Engineer, advised the inexperienced not to try it, not because of the difficulties of construction, but simply because the true-to-scale design that Keith is attempting to portray would result in slow progress which to the beginner is far from encouraging. The experienced model engineer will be familiar with the pitfalls and is less likely to be discouraged by not seeing much advancement after several hours in the workshop.

So it is necessary to know yourself. Quite a few model builders take on more than one model at a time so that if one becomes a little slow or less rewarding for a time they can continue with another until inspiration returns. And it will.

There is another aspect of model engineering related to the desire to work quickly. I refer to the need for safety. It is unlikely that we will publish a specific article on workshop safety for several reasons. Firstly, of course, many readers tend to object to articles which appear to lecture on subjects which, after all, is mainly associated with common sense. Secondly, we would not wish to create the impression that the workshop is a place to be feared, rather than respected, particularly when certain hazards apply only with particular processes or machinery which may never be used. Thirdly, the ways in which injuries may be sustained in the workshop are so varied that one article could not cover the subject, and we will rely on contributors explaining any dangers in their relevant articles. Just consider, for example, the potential hazards of hand tools (using files without handles), machine tools (unguarded end mill for example), electricity, adhesives (sticking fingers together or worse), welding (fumes), brazing (burns from pickling acid) — there is hardly a practice which does not have some possible danger, however slight.

But the problems can all be quite easily overcome by giving thought to what you are doing or about to do, and if you must hurry that job, by not producing speed at the expense of safety. There are, of course, basic rules which should be followed by anyone in a workshop. Although we are not restricted by the Health and Safety at work Act which lays down certain guidelines in industry, we do still have a responsibility to our friends, relatives and ourselves. In the same way that a welder would not dream of using a torch without protecting his eyes, then the model engineer must realise that he is not immune from the effects of negligence simply because he is an amateur.

Protection of the eyes is one of the most important of all safety precautions. The cost of goggles is negligible when one considers what one is paying for and they should be one of your first purchases. Use them whenever metal or other harmful substances are flying around. I know steel can usually be removed from the eye — often painlessly — but the after effects can be with you for the rest of your life. Use protective clothing that is adequate for the job being performed. Ordinary working clothes are fine for normal bench work, but for machine tools it is better to obtain modern overalls which have no loose bits to catch in revolving parts — and please don't leave your tie hanging out. For work with any form of acid there are special aprons and gloves available. When brazing or welding, remember, protection to the body from spatter, to the eyes from glare, and face from ultra-violet rays is essential. Wear good protective shoes or boots, it's very easy to knock heavy objects off the bench.

Make sure tools are in good condition, this is particularly important for grinding wheels which develop all manner of nasty habits if allowed to deteriorate. Keep any cloth away from rotating machinery while it is in motion — paper can tear but cloth won't. And even if you are unharmed, the chances are that your lathe, for example, won't be. Ventilation is another must when welding, brazing, spraying paint, or perhaps using certain adhesives and solvents.

All really, as I said, common sense. Think before you act. I'd like to feel that you are going to be reading Model Mechanics for a long time.

Editorial Director R. G. MOULTON
Editor LES PORTER
Associate Editor COLIN RATTRAY
Managing Director GOSPATRIC HOME
Group Advertisement Manager M. GRAY

Tether Car Racing

by Geoff Sheppard

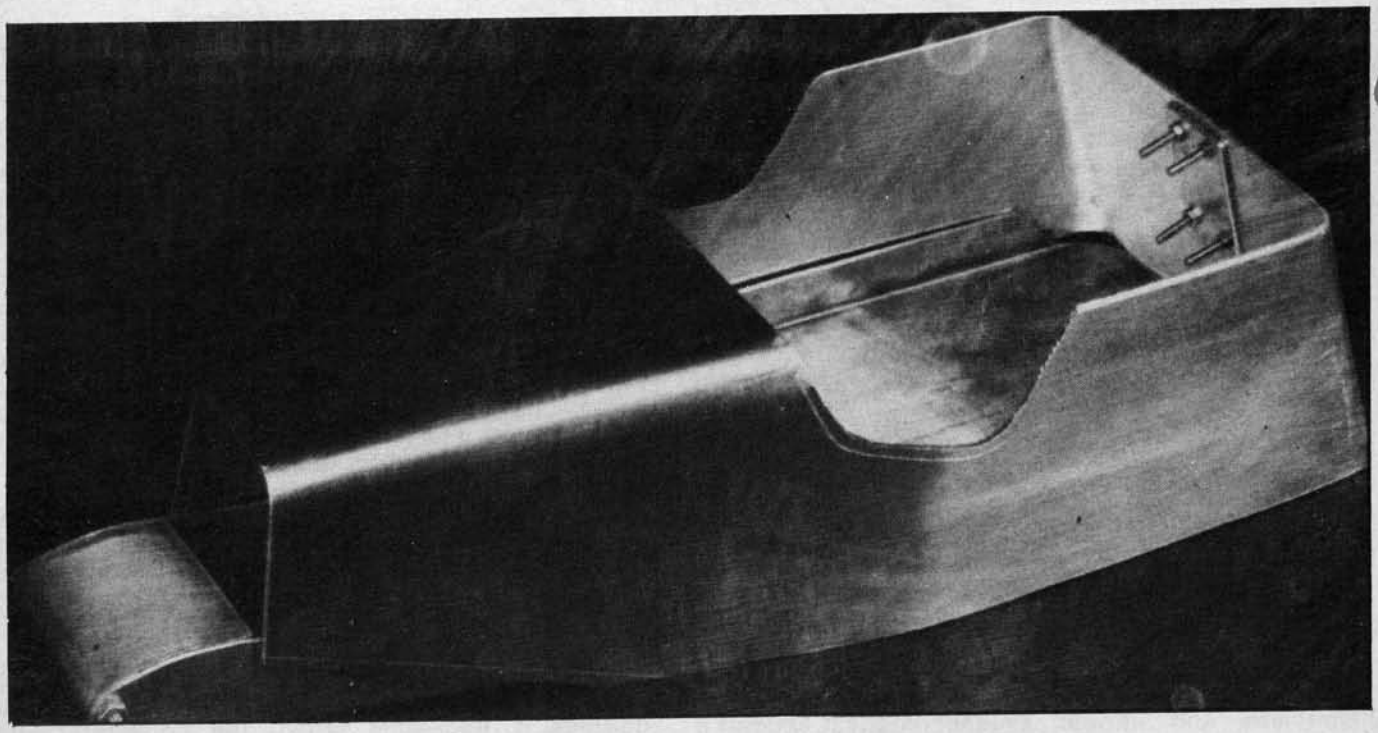

OUR NEXT STEP on from 'Tyro' is to consider a car with a metal body. The conventional racing or sports car body is full of compound curves (i.e. the surface is curved in more than one direction at once). These are not easy for the beginner to produce, and as I feel it unwise to over-tax the skills of those who are just learning how to handle metals, I had a quick look through the reference books for designs which consist largely of flat surfaces connected by simple curves. The pre-war M.G.s are, of course, examples which spring readily to mind, and that stark sports car, the H.R.G. added a few ideas.

In preparing new designs, I am not anticipating that many builders will wish to construct each as it appears. I hope that each new one will attract a few new enthusiasts who will feel that the design is to their liking and the techniques involved are within their capabilities. It is my intention to add a few new features each time, thus extending the range of workshop operation required. My real intention is to get prospective car modellers thinking about making a working model of their favourite car, perhaps incorporating a few of the features and methods illustrated in this series. I find that I am always learning new tricks as I go. You will do the same. If you feel that any of your ideas will help others, please let us know and we shall be pleased to pass them on.

This design, then, includes a number of the basic features of 'Tyro', adapted as necessary, with the addition of the metal body.

General Design Features

The chassis is again a sheet aluminium pan, with flanged sides, but has a quite different plan form. Direct drive from a 1½cc diesel engine is again shown, but any similar engine can be used. A much simplified form of engine mounting can be used this time, as the increased depth of body allows the engine to be installed vertically, hidden under the 'tonneau' beind the driver's seat area. This means that the engine is not mounted on the centre line of the car, but I don't feel that this is too important. The offside wheel again idles on its own stub axle (I did consider driving both rear wheels through a gear train this time, but this is not easy to achieve cheaply and simply so I'll save that until later.

The front axle is a simple beam, as befits this type of car, with no attempt to add springing at this stage (the majority of high speed tether cars used to run with little or no springing on either axle).

The fuel tank and cut-off (of the 'pipe strangler' type) are as on Tyro.

This rolling chassis is surmounted by a body made in one piece from sheet aluminium, bent to shape. The front is closed by a dummy radiator shell beaten to shape from sheet brass or copper while a dummy slab fuel tank can be fitted to the rear to disguise the joint in the aluminium.

Wheels are of the two-piece type with the bearings sandwiched between for all but the driving wheel.

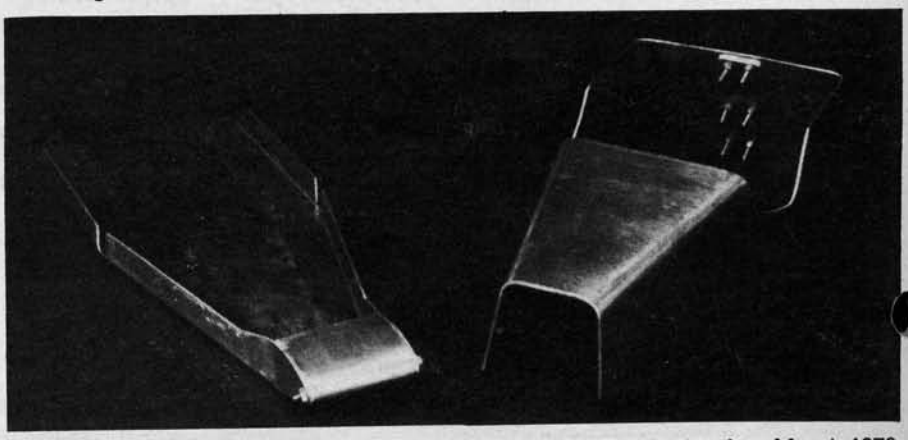

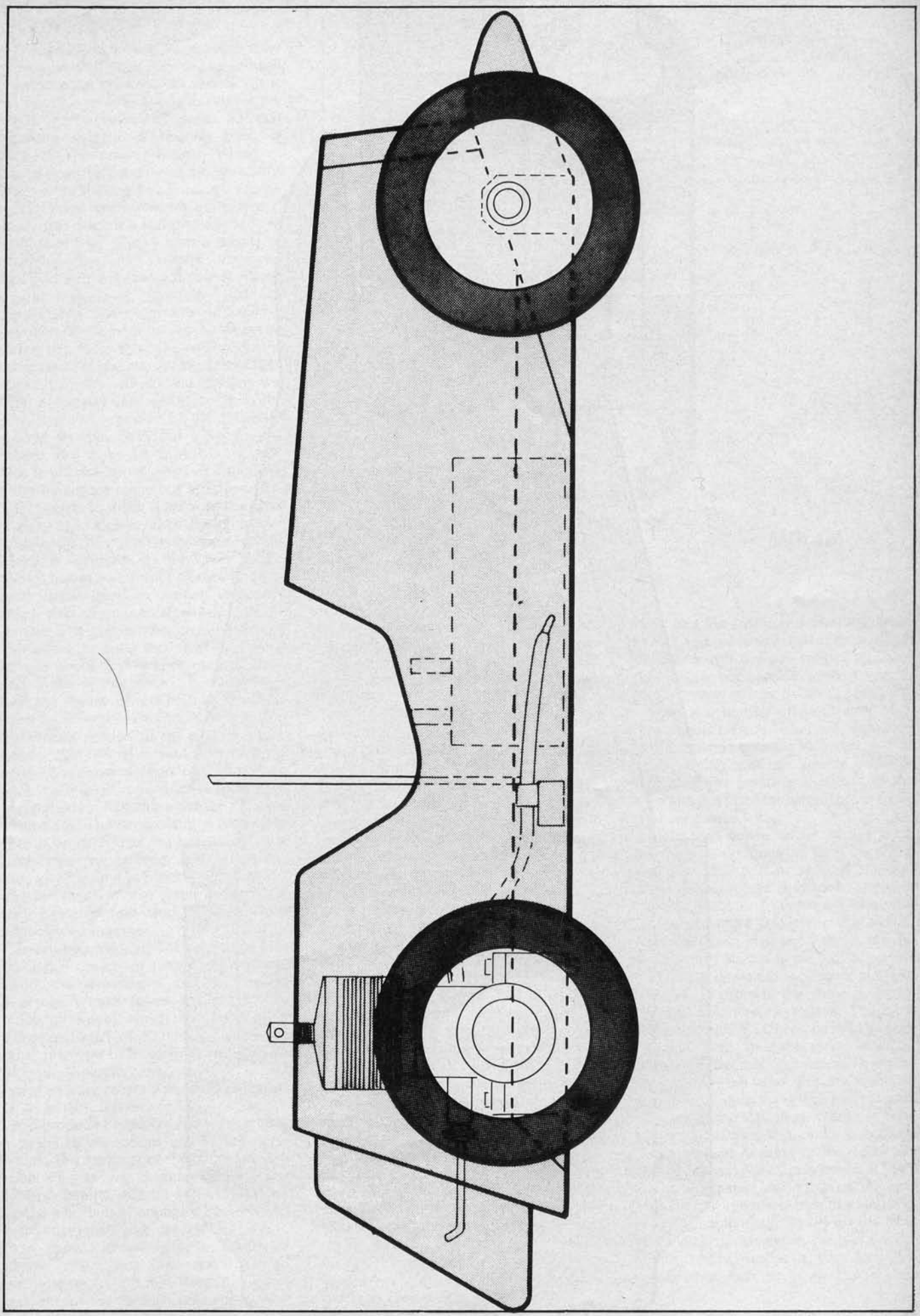

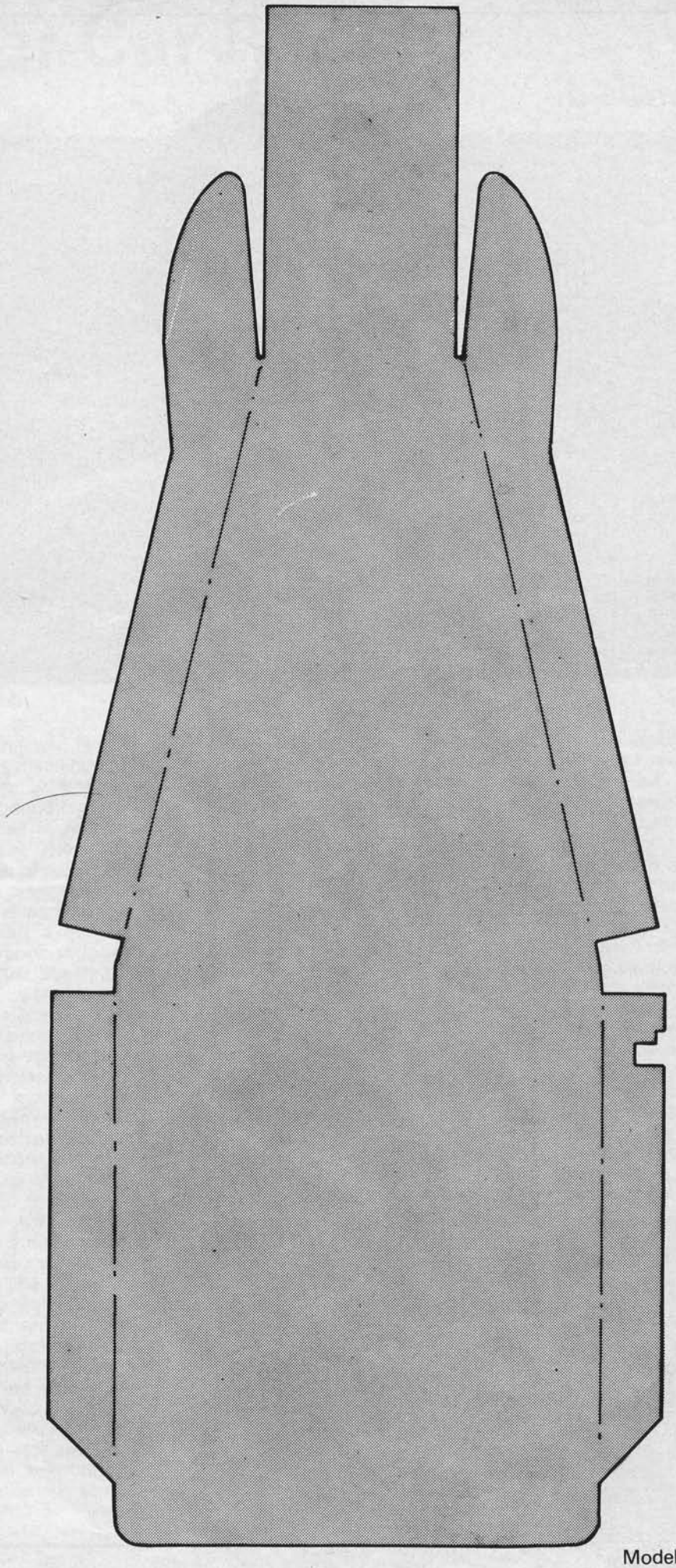

Wheel

The S.M.R.U. wheels leave a little to be desired in that they run on very small diameter plain bearings. In addition, it is not possible to strip and re-assemble the non-driven wheels with ease, so that renewing a tyre or bearing bush is difficult. The driving wheels, which of course does not need its own bearing as it clasps on to the engine crankshaft, can be split into two for the removal of the tyre. If this is also used as a non-driven wheel, as I suggested for 'Tyro', then a means of clampling the two halves must be provided and a bearing fitted. A 13mm outside diameter ball-race did fit comfortably, but there was no positive retention of the inner half of the wheel on to the ball race, so I was relying on the outer track of the race being a very light drive fit in the wheel. This system has been employed very satisfactorily in the past, but I'm not sure of the tolerance applied to this particular bore by the people who make the S.M.R.U. wheels. This could result in all sorts of difficulties if the bore does come out a bit oversize.

Our ability to make tyres from 'Flexane' enables us to look at wheel design from a fresh angle. My preference for a simple wheel is to make it from two similar turned halves, with the ball race and the tyre clamped between the two, which are simply held together by three countersunk screws. The only difference between the two is that the outer section of the central hole in one is a clearance over the axle end, while in the other it is a clearance over the means of retention of the inner track on the axle. (This could be a nut on a threaded portion of the axle or a cap head socket (Allen) screw fitting a tapped hole). The inner section of this hole in each half is of course the means to accommodate half the width of the race outer track. The dimensions of the recess should be such that the halves will slide freely over the bearing, without shake, thus locating one in relation to the other, and the depth should result in the outer track being gripped when the two halves are screwed together.

It will be obvious from the above that the detail design of the wheel depends upon the dimensions of the bearing available. I have found a suitable one, made by Koyo, which has an outside diameter (O/D) of 13mm, an inside, or bore, diameter (I/D) of 4mm and a width of 5mm. Whiston has some in his surplus range at very reasonable prices of ½in. O/D, 3/16in. I/D and 5/32in. wide.

To produce a wheel of this type, mount a piece of aluminium bar in the lathe chuck, the diameter of the material being such that is will produce 1½in. O/D (1½in. material will be O.K. if you can centre it accurately enough). Face the end of the bar, then with the later running at high speed, centre with a Slocombe centre drill. Pilot drill about 1/8in. diameter for around ¾in. deep, then open this out for the through hole appropriate to the half being made. Mount a small boring tool in the toolpost and carefully bore the recess to accept the bearing of your choice, to the fit previously described.

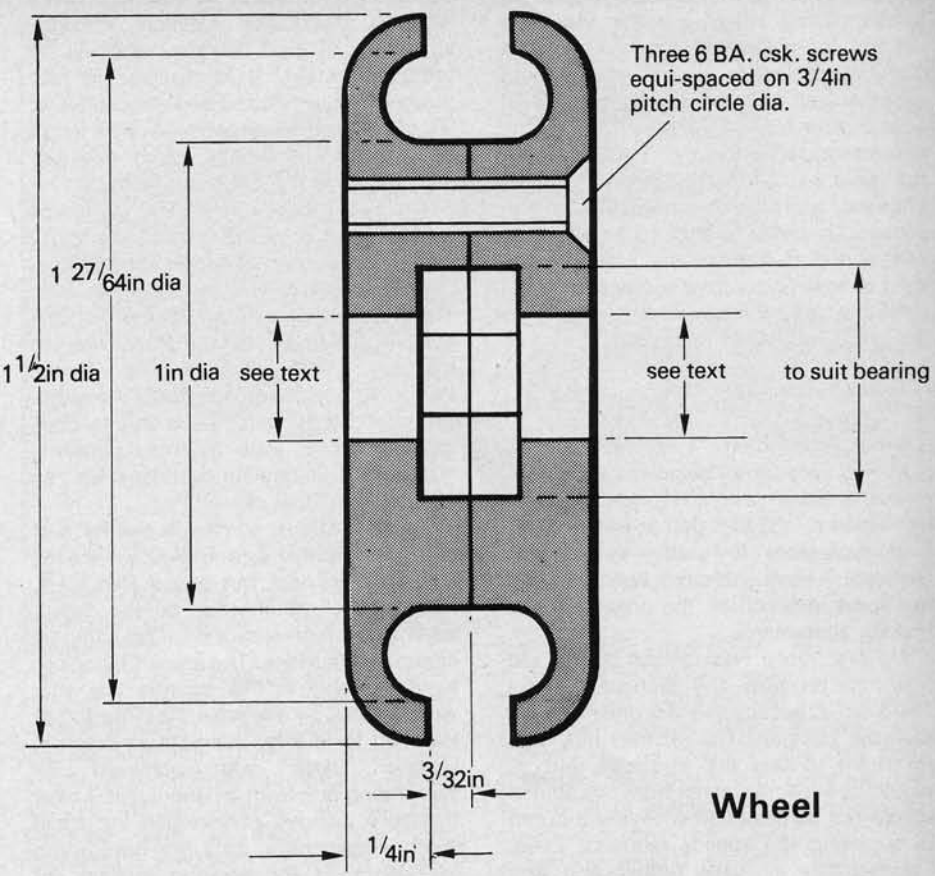

Wheel

To save using the bearing as a plug gauge and thus exposing it to the risk of filling up with swarf, it would be a good idea to make up a plug gauge of steel, to exactly the same diameter as the outer race (this must be the first turning operation, of course, before starting to attack the aluminium bar). A slight taper, or lead, filed on the end of this plug gauge will give you a good idea as to how the boring operation is going, by how far the taper enter the undersize hole. A strategically placed stop on the outside diameter will also assist in getting the depth right. The easiest way to adjust the depth is to bore the hole slightly deeper than necessary, then to take facing cuts over the end of the bar, until it is right. When boring the hole, go very carefully because some tools appear to cut better on the way out than when being fed in, and it's very easy to overdo things.

When satisfied with the bore, turn a shoulder, 1in. diameter, 3/32in. deep, to form the spigot on which the centre of the tyre fits. The final turning operation on this side is not an easy one, because it involves the use of a round nosed tool set crossways in the tool post and fed straight in to form the recess between the spigot and the outside diameter. It will probably be necessary to grind up a special tool to get the right form, because the radius which forms the recess must blend into the spigot and must also leave a band approximately .040in. thick which will clamp into the side wall of the tyre. The length over which such a tool is cutting makes chatter a distinct possiblity.

After this parting off, just over ¼in. thick should be simplicity itself, especially for those who possess a back tool post! A sharp parting tool, set upside down in this, at centre height and square to the lathe axis is a must for parting off as far as I am concerned.

Mate both halves as far as this joint, then remove the stock bar from the chuck and grip each part in turn on the 1in. diameter spigot (not with such force that it is damaged) — to finish the face with light cuts before fashioning the radius. Although frowned upon by some, the use of a file here simplifies the job.

The final operation is to mark out drill, tap and countersink the three holes for the 6BA countersunk screws. The pitch circle diameter (PCD) can be marked with a scriber held in the scribing block or clamped in the tool post before removing the job from the lathe. Set the scriber to the correct radius, bring it up just to touch the face of the job, then rotate the lathe by hand, so that the circle is scribed.

The angular position of the holes can also be marked if the job is held in a 3 jaw chuck. Bring each jaw in turn up against a stop wa tool in the tool post or a length of bar of suitable length stood on the lathe bed). With the scriber in the block set at centre height, scribe a horizontal line across the pitch circle to locate each screw.

On removal from the chuck, fit the two halves of the wheel together over the bearing (or preferably a dummy of the same dimensions — swarf again!) Clamp together and drill through on one of the hole centres No. 44 (or 2.2mm). Part the halves and tap one side 6BA. Open out the hole in the other half to No. 33 (2.9mm) and countersink to suit the screws. On the outside of each half lightly centre pop to identify the mating holes then re-assemble with a screw in position to clamp the halves while the other two holes are drilled and tapped.

Tyre

When describing 'Tyro', I specified S.M.R.U. wheels as being the only ones available. Some potential builders may be dissuaded by the fact that at the moment it is necessary to obtain these from Sweden. I have therefore been carrying out some research on the possibilities of making alternatives.

My first move was to look up the old literature on how the pioneers of the 1940s did it, because we are once again in a similar position. The obvious ploy was for them to raid the toyshops, but as would be expected, tyres from this source would not be designed with any thought of surviving the speeds required. Every commercially available rubber ring was considered and many and varied were the schemes devised for clamping them into wheels so that they wouldn't fly off.

A popular source of rubber was that sold by the large stores for shoe repairing purposes, and many a car showed a clean pair of heels to the opposition — literally! Much ingenuity was exhibited in the machining of this raw material into the profiles required.

Some stalwarts went back to squre one and obtained supplies of raw, uncured rubber which was cast into two and three piece metal moulds which had been carefully machined as the 'negative' of the required shape.

Les Hole, a former secretary of the Bristol and West Model Car Club (come to think of it, I feel that technically he is still in office!) recounts how, after having poured his first attempt he duly vulcanised it (mould and all) with a blowlamp. On opening the mould, he found that he had rather overdone things because when the hot tyre slipped out of his hands, it hit the floor and shattered.

This conversation led me to consider the use of cold curing synthetic rubbers now available. The main drawback seemed to be that I couldn't find a black one, and although white tyres would be better than nothing, I still felt that I could do better.

At about this time I acquired Gerald Wingrove's excellent book 'The Complete Car Modeller'. In it he describes how he overcame the problem by mixing in carbon black, but the smallest pack I could find appeared to contain about a hundredweight. The search for a black synthetic eventually proved successful when I discovered Devcon 'Flexane' which is a cold casting material of urethane nature. It is available in four grades, giving Shore Hardness values of 30, 60, 80 and 94 respectively. The list of possible uses included 'Trolley Wheels', so I thought I was on the right track.

The availability of other synthetic materials, such as the cold curing epoxy resins gives us a further advantage over the pioneers. These materials allow us to make moulds by pouring over a 'positive' master pattern, rather than having to machine a 'negative' mould. Gerald Wingrove has described clearly the multi-step method by which he is able to cope with undercuts such as tread patterns, but for our immediate purposes we can adopt a simplified procedure.

The first step is to design the form of tyre we require. The S.M.R.U. driving wheel is quite neat, but does suffer, I feel, from being rather thin at the tread, leading to a high rate of wear on a tarmac or concrete surface. The precious stock of tyres available in this country last year was depleted by one when Stan Barratt of Hull had to fit a replacement at Brean in October. This was achieved by scrounging one from an unbuilt kit. I have therefore decided to increase the tread width considerably until we have more experience of the wearing qualities of Flexane.

Thinking back to the old days, I recall two factors which seemed to be essential if a tyre was to stay on the wheel at high engine speeds. These are:—

1. There must be positive restraint by clasping into each side wall.
2. The central hole of the tyre must locate closely over a rigid spigot of either solid or tubular form, thus discouraging distortion.

The S.M.R.U. wheel exhibits both these features, so I guess they're still valid.

Once these principles are accepted, it is only a matter of juggling the dimensions within the outside diameter required, the selected width and the bore allowed by the wheel bearing design.

The next move is to machine up a rigid model or pattern of the finalised design. Reluctant to commit precious tocks of aluminium bar for this purpose, I looked round for an acceptable (and perhaps preferable) alternative. The local stockist of Flexane deals in many forms of non-metallic material, such as nylon, Tufnol and Perspex. He aiso manufactures in these materials and saves all his offcuts, which are then sold for 50p per kilo. For £1.00 I came away with a large bag containing useful odds and ends of many sections (you just take pot luck).

A piece of 3/8in. thick Tufnol was marked with a 2¼in. diameter circle, and cut out just oversize with the bandsaw. A ½in. diameter hole drilled in the centre proved accurate enough to mount the job on my ½in. stub mandrel, held in the 3 jaw chuck. The outside diameter was turned with a normal right hand knife tool, then bearing in mind the fact that a 2 part mould was to be cast, a slight 'draw' was filed on one half of the O/D.

The clamping groove was formed in the side wall by means of a thin tool held crosswise in the toolpost fed straight in one the selected diameter. (If I remember correctly, this was a tool specially ground up many moons ago for screwcutting an odd worm). After clearing a few bits of burr and flash with a file, the job was turned round on the mandrel and the grooving tool fed straight in before touching the cross slide setting, thus ensuring that the two grooves were on

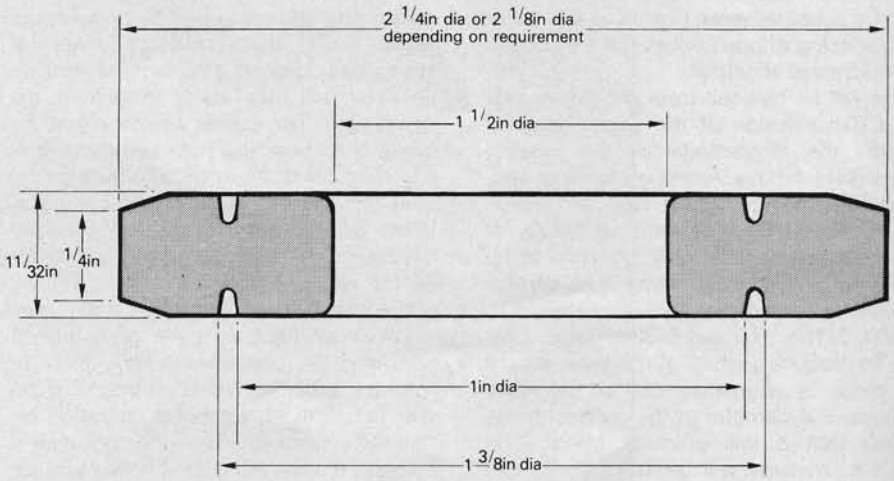

Tyre

the same diameter. Before removing from the stub mandrel, a matching draw was filed on the second half of the tread area. It was necessary to clean up the face of the Tufnol where some delamination had occurred, and the resulting thickness was about 11/32in.

The final operation was to grip the pattern lightly in the external jaws of the 3 jaw chuck to bore out the central 1in. diameter hole. A few seconds' work with a round file again put radii in the right places.

The result was quite a pleasing mock-up of the tyre which, when clamped between the halves of the wheel centre, looked O.K.

At this point, help and advice was sought from a colleague whose speciality is making one-off moulds for special purposes, his castings being usually the wax patterns used in lost wax casting. His view was that my simple model could produce an excellent mould, and so it proved.

Step 1 was to prepare a block of modelling clay, about 4in. square by about 1¼in thick. This was shuttered up with odd ends of Perspex which were about 2½in. high, held into a box form around the clay with a couple of 6 clamps. The modelling clay was levelled as well as possible within the 'box', being pushed out to seal all round the sides.

Step 2 was to bury the pattern in the clay to as near half its depth as possible. (If you're significantly adrift from the halfway line, the 'draw' which was filed on each half of the tread will stop you from getting the pattern out of one or other halves of the mould). After finishing round with a flat knife, a number of registers were formed by plunging a conical object into the clay at strategic points. One was in the centre of the pattern and the others randomly placed round the outside. Care must be taken not to deform the surface of the clay too drastically so that the surface level near the pattern is altered.

Step 3 consisted of spraying the surface of the modelling clay, the pattern and the insides of the 'box' with a silicone release agent from an aerosol, then filling up the space above the clay with an epoxy resin. (Araldite and Devcon, among others, market suitable compounds). The resin was mixed with some aluminium powder to provide additional strength but there are, apparently, many more fillers which would be suitable wany good supplier will advise). The resin was applied in two ways; firstly a light coat was brushed over the clay and pattern, to ensure that there were no air bubbles trapped near the surface. The remainder was poured up to the top of the shuttering, again care being taken to ensure a minimum of air bubbles. This half of the mould was then left to cur completely.

Step 4 entailed removing the modelling clay, then replacing the shuttering, so that the other half of the mould could be poured in the same way as the first, not forgetting, of course, a spray with the release agent.

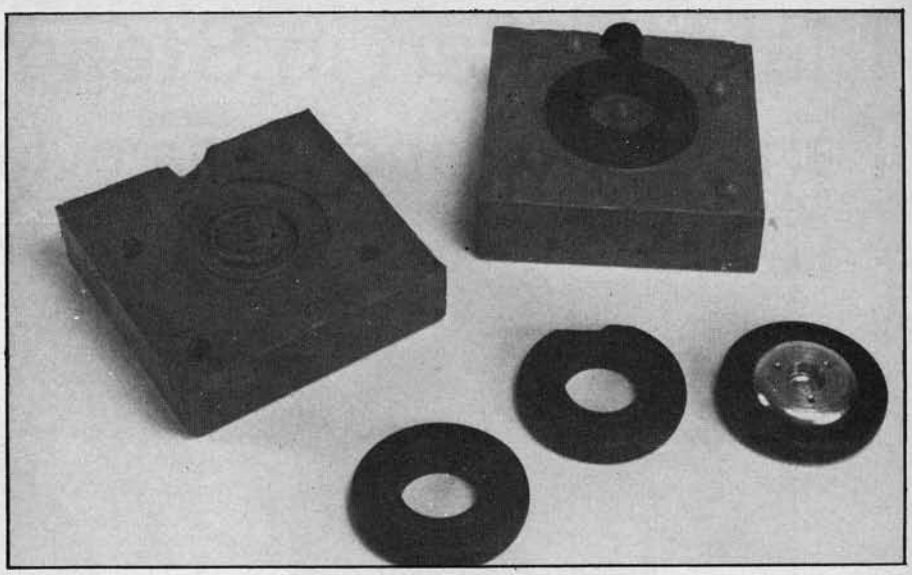

Note the failure in the centre

Step 5 was to split the mould and to remove the model, which was achieved with little difficulty to reveal a perfect impression in both halves. If there are any small blemished, they should be corrected at this stage; 'pimples' are carefully removed with a sharp knife and depressions filled with a 5 minute epoxy. An 'in-gate' or runner carved, partly in each half, from an edge of the mould to a convenient point in the impression completes the mould, which is now ready to accept the rubber compound.

After examining one or two test pieces, I selected the hardest grade of Flexane, namely 94, as being suitable for the small, solid section tyre with which we are dealing. The main problem I could foresee was that, as I was using only one mould, and that the tyre would use only a small quantity of mix, I would need to be very careful in the measuring and mixing of the two constituents to avoid a great deal of waste. A search in the domestic 'stores' revealed a small plastic container of the type used for individual servings of marmalade (nothing ever gets thrown away in our house!)

The recommended mix for '94' is 22 parts of Flexane to 10 curing agent, so I tried 2 measures of one to use less than 1 of the other into a redundant yoghurt carton, followed by a good stir. I had previously brushed a thin coat of the supplied release agent over the inside of the mould and over the contact faces where I thought the mix could spread. This was done because I first applied a coat of the mix to each side of the open mould. The two halves were then brought together and clamped. The remainder of the mix was poured down the feed runner, a thin rod being used to agitate the urethane, in an attempt to release the trapped air. I had to work quickly, as the working life of this grade is only ten minutes.

When no more mix would pass through the runner, it was left to cure. On opening the mould — success? No, FAILURE, or at most 90% success. The Flexane had hardened off before the last pocket of air had been released from just under the runner. The remainder of the tyre was, however, perfect and convinced me that with a bit of practice, a satisfactory job could be achieved.

For the second attempt I took much more care to ensure that the proportions of the mix were correct. When trying to work quickly it is very easy to leave some of either constituent in the measuring vessel, and with small quantities this can have a significant effect. The major change in technique, however, was to fill each half of the mould independently, then bring the two together before the mix started to harden. I remembered again to coat the mating faces of the mould with release agent, so that any flash extruded from the centre would not bind the two halves together. The result was a great improvement. The only defects were some small pin holes around the tread area and one small air bubble in the bore. The latter resulted, I feel, from the inability of air in the central area of the mould being able to vent. I therefore drilled a few holes from this area to the outside of the mould.

For the third attempt, an old 5ml. medicine spoon was used as a measure, four slightly heaped ones of Flexane being used to two level ones of hardener. Care was taken to remove as much as possible of each from the spoon, each time and to clean the spoon before changing from one constituent to the other.

Each half of the mould was carefully filled and a little more time allowed to elapse (3 or 4 minutes) before trying the two together, so that as many of the air bubbles as possible could come to the surface.

This time the result was as near perfect as could be wished (just the odd pin hole here and there) so I now consider that simple tyres are quite within anyone's capabilities.

Make a Start in Steam

Part II two and three cylinder engine

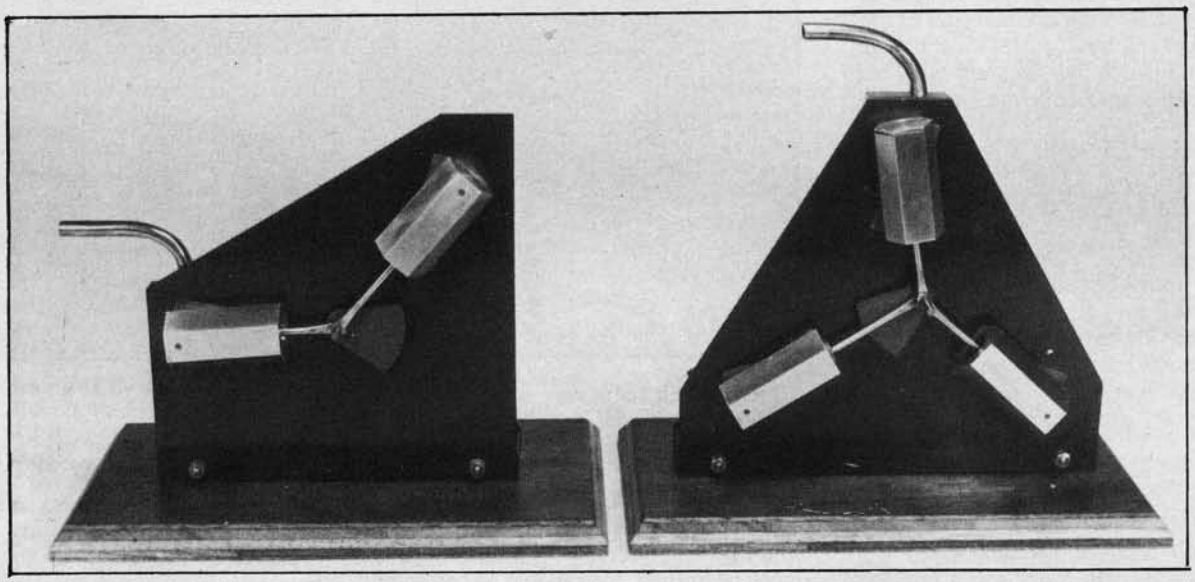

by John Wheeler

THE SIMPLEST DEVELOPMENTS of the single oscillating engine are to try to increase the output power and to make the engine self-starting. Two cylinders will increase the power whereas three cylinders spaced at 120° will enable the engine to self start as well as produce increased power. With two cylinders several arrangements are possible —

(a) cylinders opposed to each other, i.e. at 180° angle
(b) cylinders inclined at 90° to each other
(c) cylinders inclined at 120° to each other
(d) cylinders inclined at some other angle to each other.

Many of these arrangements are already found in car engines to satisfy balance problems and space availability, e.g. horizontally opposed or the Vee's of 90°, 60° or 120°.

The two-cylinder design I selected inclines the cylinders at 120° and uses the cylinder and piston assembly, crankweb and crankshaft, and flywheel described for the single cylinder in Part I. I also made up the three cylinder version and will include details of the main frame and inlet pipe arrangements. I have made no attempt to bring the exhausts together into one outlet as I wanted to keep the engines as uncomplicated as possible.

If, however, the exhausts were all connected, a further development would be to run the inlet pipe and exhaust pipe through a reversing block, allowing the steam inlet and exhaust to be interchanged, which in turn would reverse the direction of rotation of the engine.

Mainframes. Fig. 1.

The mainframes are built up this time to avoid bending the thicker sheet. Mark out, hacksaw away the waste and file the two sides making up each complete frame from steel sheet approx. 1mm thick or 18 gauge. Drawfile all the edges and remove those burrs; aim to keep the frames as flat as possible, so avoid using a guillotine. Drill the 5mm dia. holes in two stages to give more accurate holes, first with a 4.5mm drill and then with a 5mm drill. Even then, if you have one, a twist from a 5mm reamer will help to get that truly round hole. Cut off a length of mild steel 135mm for the double engine or 160mm for the three cylinder from a bar size 25 × 10mm. Drill this with two 4mm holes positioned 25mm from each end on the centreline of the wide face, which allows the engine to be bolted or screwed down to a wooden baseplate. Clamp the two frames each side of this base piece and drill through with a clearance drill for M3 to 5BA thread. Hold together with a tiny bolt, washer and nut, or if you cannot find a long bolt, cut a short thread on each end of a suitable length of 3mm or 1/8inch mild steel rod and fit washers and nuts each side.

Once the frames have been bolted together, drill through the centre 5mm dia. hole into the rear frame. Keep the drill square to the frames or use a verticle drill set up, resting the rear frame on the drill table. This will need a three stage process for accuracy. 'Spot' with a 5mm drill through the front frame hole, that is, just start drilling into the rear frame providing a start for the next drill which will be undersize. Replace with a 4.5 drill and drill right through the rear frame. Now you have ensured that the hole is correctly positioned which in this case can be opened out with the 5mm drill. This may seem long-winded, but does help to avoid that three lobed shaped hole a twist drill so often produces in sheet material. 'Spotting through' is often used to position holes or threads on matching parts.

Make up the crankshaft, crankweb and crankpin as described in Part 1 and also two or three cylinder assemblies. For multiple numbers of a given part, work each similar process on each part at the same time, that is, hacksaw off three cylinders, file or face one end of each part, mark out to length on each part, file or face off to length — and so on. If you always work on the parts in the same order you should find cylinder number three the most accurate as you have had one and two to practise on! This is the reason why most modellers often make up an extra item, treating this as number one, the trial piece, which can act as a spare if all the others are good, or a replacement if you spoil one. Our cylinders each require a 40mm length of hexagonal aluminium alloy of 20mm across the flats (A/F). These are squared off to equal lengths, drilled and reamed

1a Mainframes two cylinder engine

Rear frame shape shown with tint.

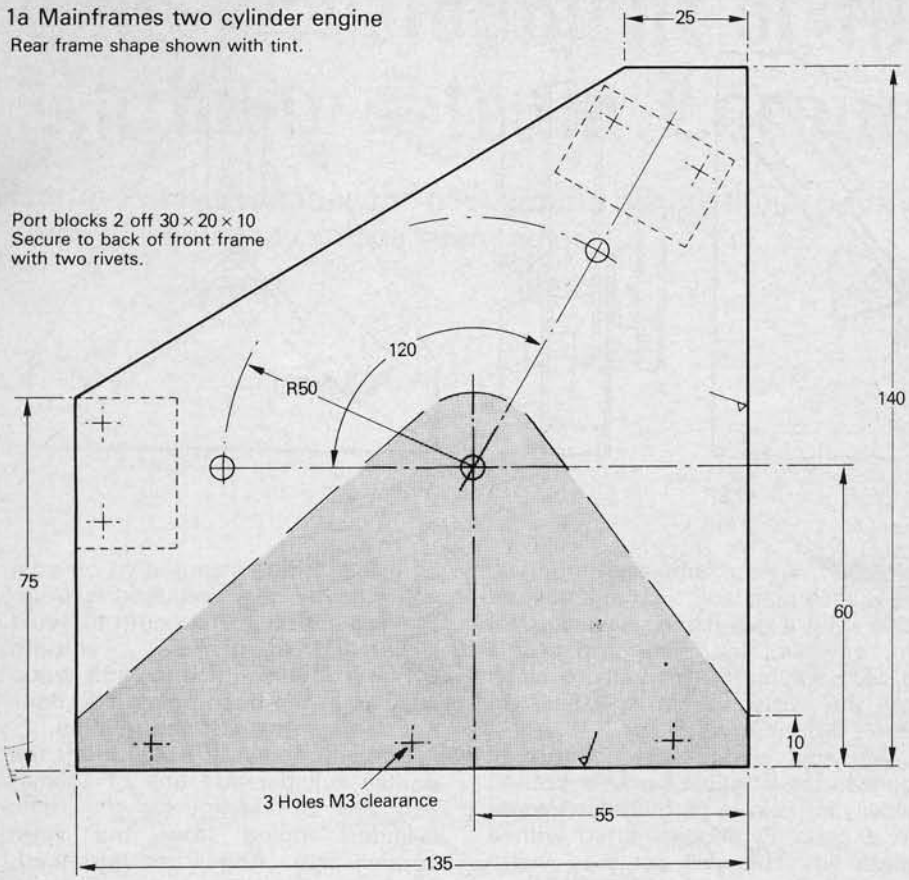

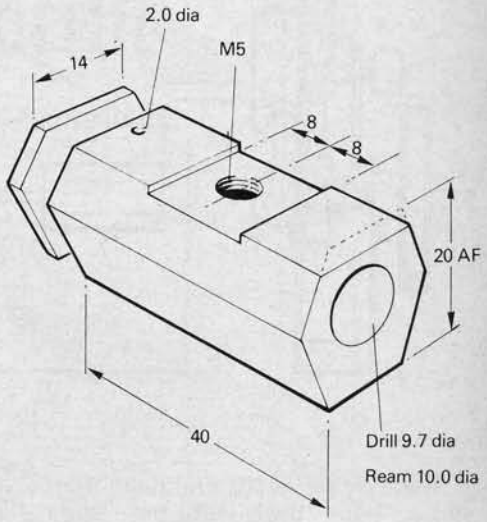

Fig. 2 Cylinder

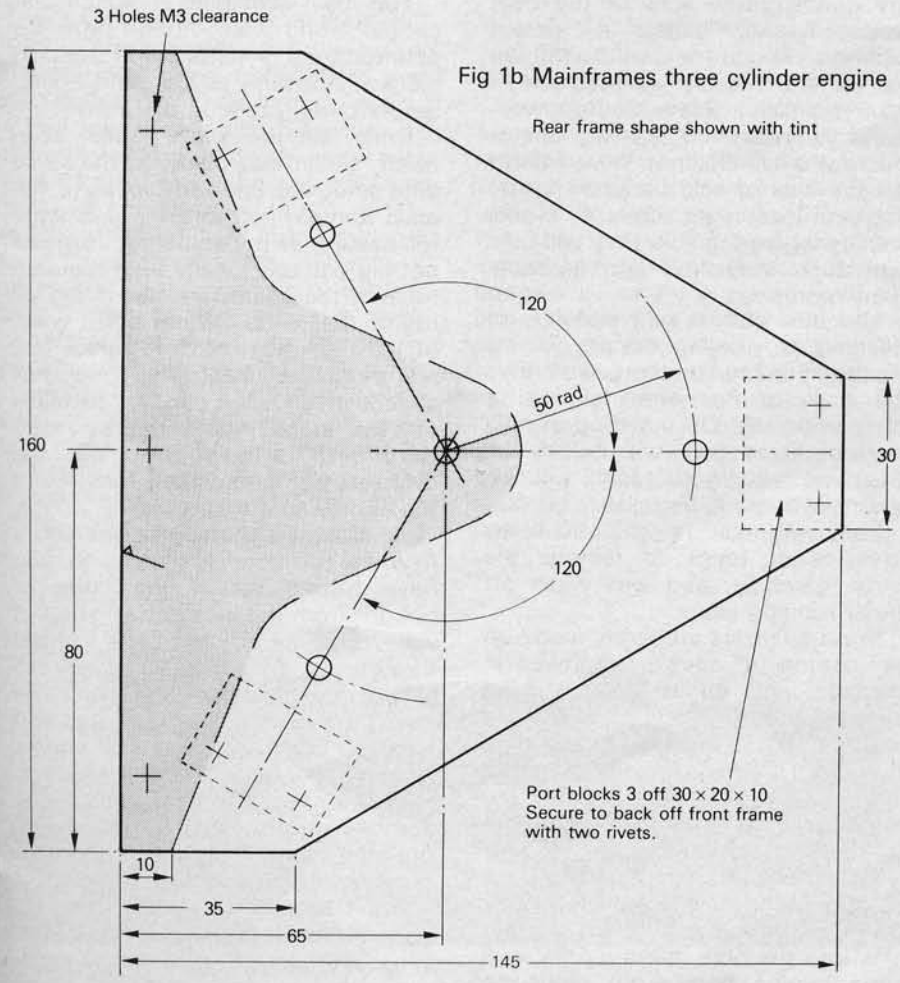

Fig 1b Mainframes three cylinder engine

Rear frame shape shown with tint

through 10mm or 3/8inch.

This is easily done on a small lathe but it will require extra care if the ends are hand filed square and then drilled and reamed using a vertical drill. I found that a synthetic cutting fluid called *ULTRALIN* made the drilling and reaming of the aluminium alloy less liable to jam, or build up of swarf on the cutting edges to occur.

Reaming or even boring out to size on the lathe is important here as we want a cylinder with a smooth bore. Mark the centre of one of the long faces of the cylinder and drill and tap M5. Try not to break into the bore, but no real harm will be done as this hole will be blocked up by the pivot screw which will be fitted in with Araldite or Loctite. However, when you do fit the pivot screw, make sure it does not protrude into the bore to jam or stop the piston in its travel up and down the bore. If necessary, clean out the bore with the reamer after the Araldite has set hard.

But back to the cylinder. File or machine away this long face carefully, keeping it flat, until its width is approx. 14mm and then for 8mm each side of the pivot screw hole, file away to a depth of ½mm (Fig. 2). This is to reduce the area of contact with the mainframes and hence the friction of the oscillating port faces. It also allows the port faces to bed down more quickly.

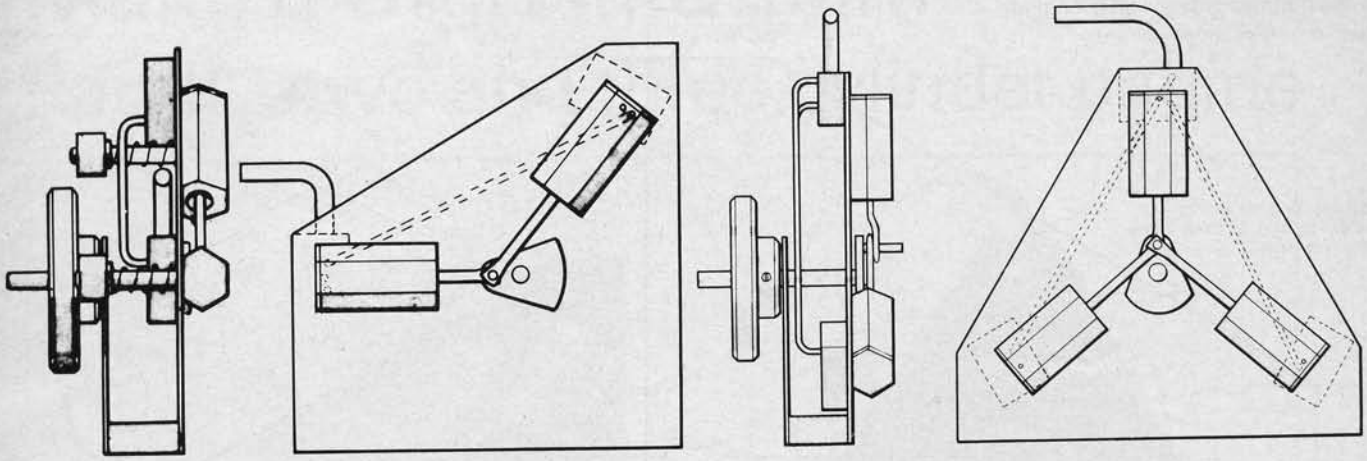

The cylinder heads are made from slices 1mm thick off the same hexagonal bar or cut out from alloy sheet, and the pivot screws from a length of 5mm rod threaded each end M5. A compression spring and adjusting nut for each cylinder nearly completes the assembly.

Make up the piston and connecting rod (see Part 1) and fit together so that the length from piston top to the centre of the crankpin hole in 55mm.

I found it easier this time to secure the port blocks in place using countersunk rivets, then after I had drilled for inlet and exhaust ports, counterbored for the copper inlet pipes and fitted the pipes, I soldered the lot in place in one go. Once the port blocks have been riveted in place, assemble the cylinders on their pivot screws temporarily, fit the pistons and connecting rods and place in position on the mainframe and over the crankpin. I found it necessary to 'joggle' the piston rods for all to fit on the single crankpin and rotate without jamming. Straight piston rods would be ideal but will require each successive cylinder to be set off the mainframe by increasing amounts.

Add the compression springs and adjusting nuts, making sure all rotates smoothly. Taking each cylinder in turn, set up for drilling the inlet and exhaust ports (see Part 1), clamp in position each time and drill through the cylinder into the port block with a 2mm drill.

This outer hole is then filled with Araldite when the cylinder head and pivot screw are finally fixed.

Remove the cylinder assemblies and crankshaft from the mainframe, and take the mainframe apart. Drill into the rear of the port blocks at each inlet position with a 4mm drill to a depth of 5mm. Simply stated, this is 'Counterbore to a depth of 5mm' — another technical term learnt! The copper inlet pipes between the port blocks will need annealing, that is, heat each pipe length up to a dull red heat with a gas flame, leave to cool for a while, and then drop into a diluted sulphuric acid bath to clean off the scale. Avoid splashes, so don't drop it in when hot.

My acid is one part commercial concentrated sulphuric acid poured slowly into seven parts distilled water in a glass Pyrex dish fitted with a glass lid. This will get very warm when freshly made up. DON'T — repeat DON'T — ever pour water into any concentrated acid as the heat produced will cause a violent explosion, and the acid will be thrown everywhere. I keep my diluted acid in the Pyrex dish inside a secured, well-marked container. Keep well out of reach of small children. If you don't like the idea of acid baths at home, visit your local night school or Model Society where I'm sure they will help with such a facility, and probably many more!

This acid bath is only suitable for cleaning or 'pickling' copper, brass, gunmetal or bronze items to remove the scale or flux after heating or silver soldering. Do not drop in mild steel parts as they will quickly be dissolved and your acid will be neutralised, made useless!

You will need a pair of brass tweezers or tongs to remove the parts, carefully, and well wash off under running water.

Brass tweezers are easily made up by cutting a couple of 'tweezer shaped' legs about 150mm long from brass sheet, bending to a curve between the fingers so that when you rivet the wide ends together (brass or copper rivets, please) the working ends are about 10mm apart.

When bending copper pipes, drill an easy fitting hole in a piece of soft wood, push the end of the copper pipe into the hole, bend a little, pull out a fraction, bend again, pull out a bit more, bend again and so on until you have the required curve. Practise with a spare length to avoid kinks and to achieve a smooth curve. You will notice the soft wood crushes at the bend points and does not damage the soft copper pipe.

Cut off one length, 145mm for the double cylinder and one of 145mm and one of 155mm for the triple cylinder engine from the 4mm copper pipe. Anneal as described, pickle in acid and bend to fit each engine.

The main inlet pipe is ¼ inch dia. copper and is fitted into a counterbored ¼ inch hole in the port block. Anneal, pickle and bend before cutting to length.

Once all the pipes have been fitted, solder into place, at the same time soldering the port blocks to the main frame. I had to use a gas flame for heating as my soldering iron was not big enough for the heat required to melt the solder and let it run all round the joints. When cool, wash off all the traces of soft solder flux and paint the mainframe. I suggest a dark green. Don't forget to mask off the areas where the cylinders rub. Polish up the copper pipes, the cylinders and connecting rods. Paint the crankweb a bright red.

Re-assemble the engine and add a flywheel of your choice, one you have turned up in the lathe or bought from the local model shop. It will need a 5mm hole drilled through it and a grub screw to secure it to the crankshaft. Fit inside, or outside the frames as you choose. Screw or bolt the engine down to a wooden base, connect up to a low pressure steam or air line and hey presto, either engine should zip around, just right for driving a small fan or generator.

Don't forget the oil can on allmoving surfaces.

The Development of the Railway Steam Locomotive

Martin Evans describes the background behind the famous locomotives, some of which may still be seen today.

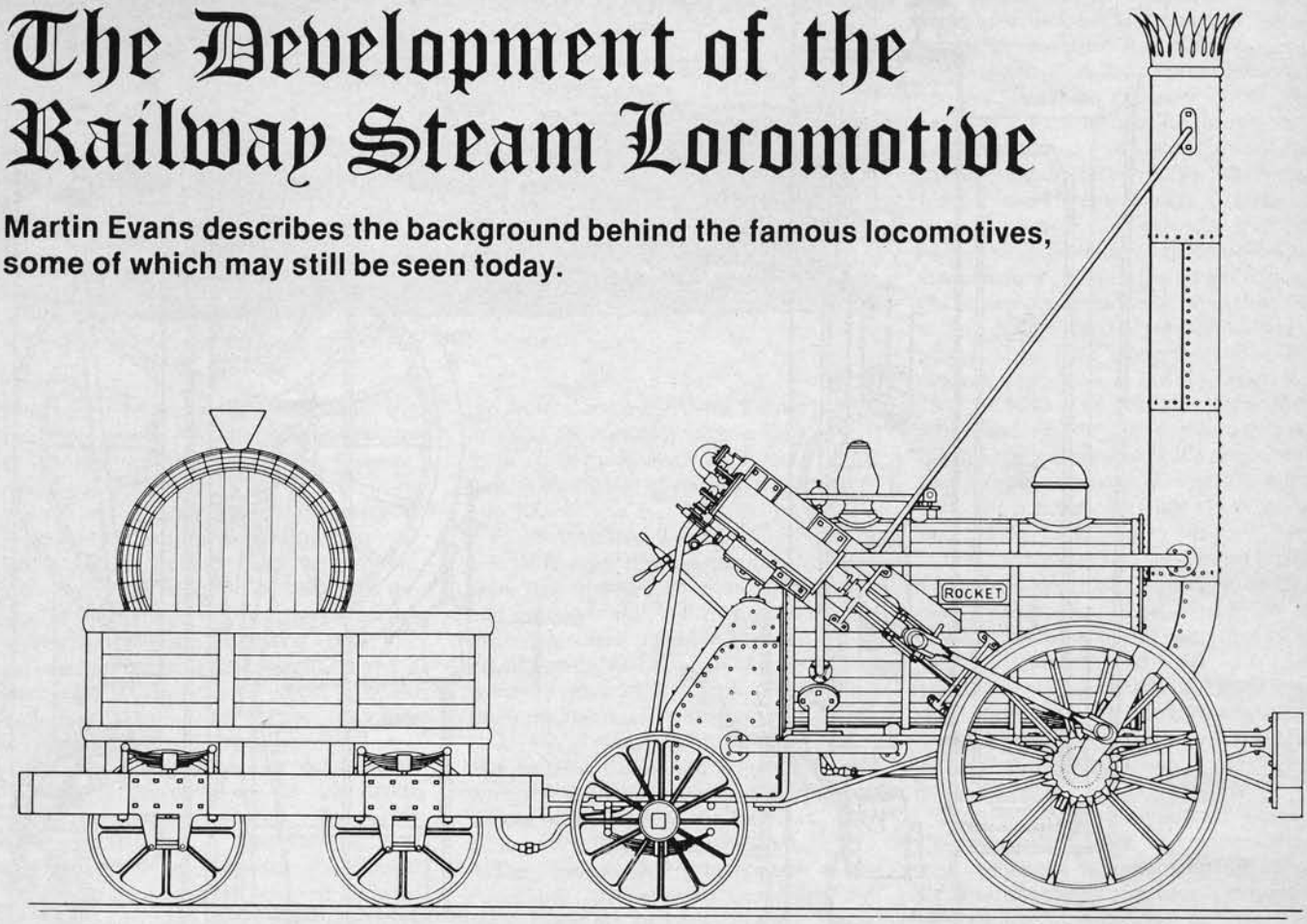

'Rocket' of Rainhill Trials fame

THE EARLY STOCKTON & DARLINGTON locomotives were coal burners, as this fuel was cheap and obtained from collieries served by the railway, but for many years from 1829, coke was the normal fuel for steam locomotives, apart from the S & D and one or two other lines in the Durham area.

The early multitubular boilers with their small fireboxes and short tubes were unsuitable for bituminous coal burning. Early attempts to overcome these difficulties took many forms, such as the addition of some kind of combustion chamber — i.e. a chamber to increase firebox volume without increasing grate area. Other ideas included the fitting of double fireboxes and the addition of the "brick arch". Perhaps the most successful of the experiments to make the locomotive boiler suitable for coal burning was that carried out by the Midland Railway, in 1859. The "brick arch" used consisted of nine blocks forming an arch across the firebox, its lower edge being arranged at the front bottom corner of the firebox, with the arch sloping diagonally upwards towards the rear. Combined with this, a deflecting plate was fitted immediately above the firedoor, sloping downwards, so as to prevent cold air being drawn in from the door and straight across to the tubes. Similar brick arches and deflecting plates were used right up to the end of the steam "era".

Between 1860 and 1865, the use of steel in locomotive work was greatly extended, this metal being used for wheel tyres and axles, and later for boilers and fireboxes. Injectors, for using the power of the steam in the boiler to force and feed water into the boiler, were also introduced in this period, as were screw reversing gears and water pickup gear in locomotive tenders, to pick up water while running, from troughs between the rails.

The first successful steel tyres were made by Krupps of Essen, Germany. Many British locomotive engineers used Krupps tyres; later, successful steel tyres were manufactured by Henry Bessemer & Co., and by Naylor & Vickers of Sheffield.

The earliest steel boilers were made in 1862/3 for the Maryport & Carlisle and the L.N.M. Railways, though the latter railway used Lowmoor iron (a very pure form of iron produced in Yorkshire) for boilers for many years after this.

One of the most important inventions in the locomotive fittings field was the invention of the injector, by Giffard in France in 1859. In the injector, live steam from the boiler is introduced through a cone, picking up the feed water in the fitting and delivering it through further cones, and through a non-return valve to the boiler. The great advantage of the injector was that the locomotive boiler could be filled while the engine was stationary; furthermore there were no moving parts to wear out.

The injector was quickly adopted by nearly all British railways, although Stroudley on the L.B.S.C.R. continued to use crosshead-driven pumps.

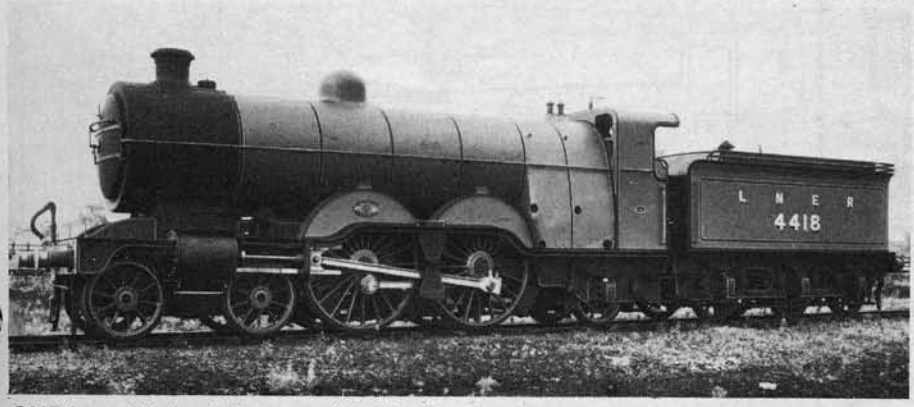

GNR large "Atlantic" as modified by Gresley.

Locomotive Design

Returning to locomotive design, one of

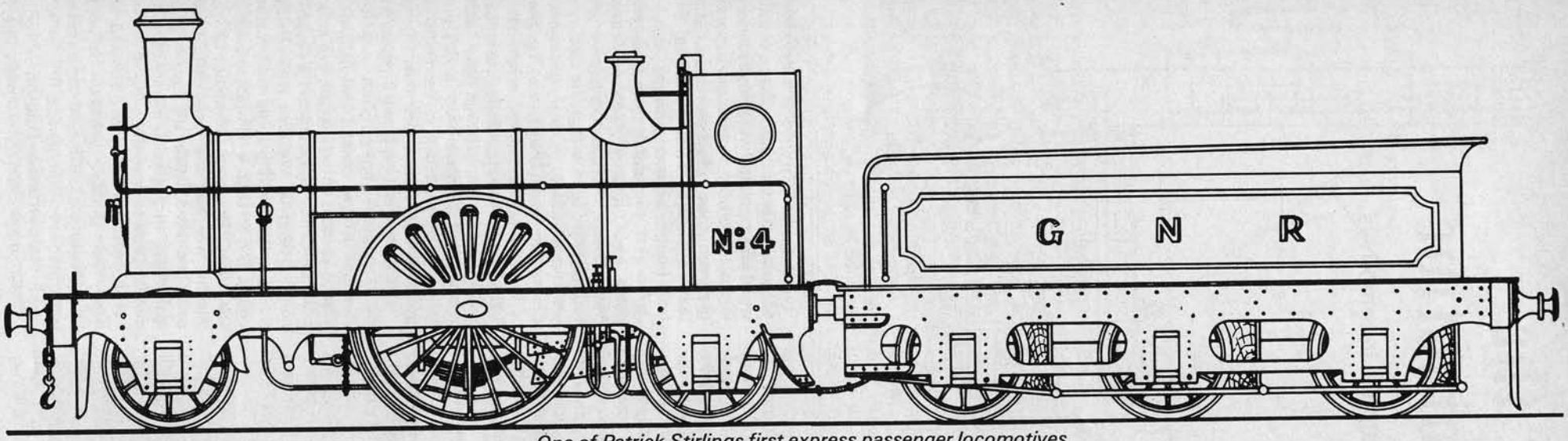

One of Patrick Stirlings first express passenger locomotives

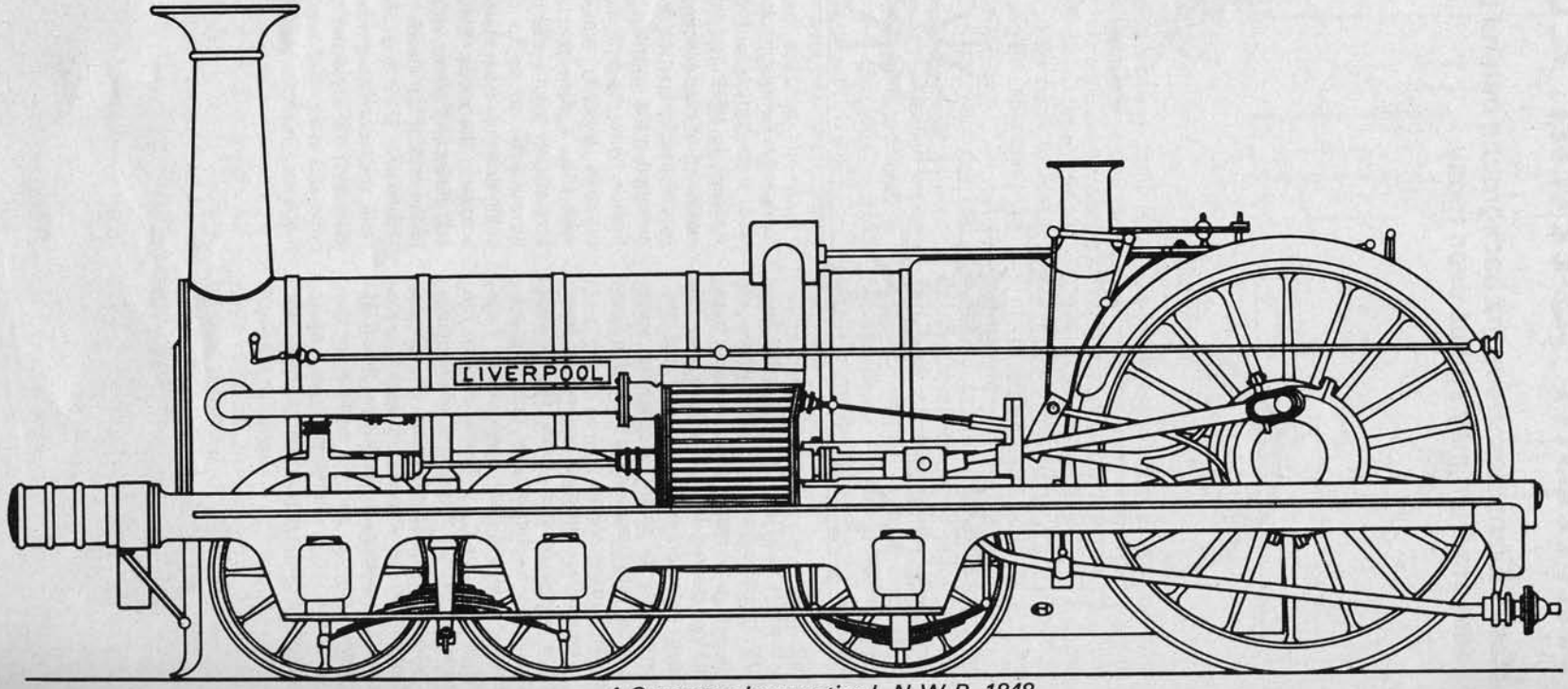

A Crampton locomotive L.N.W.R. 1848

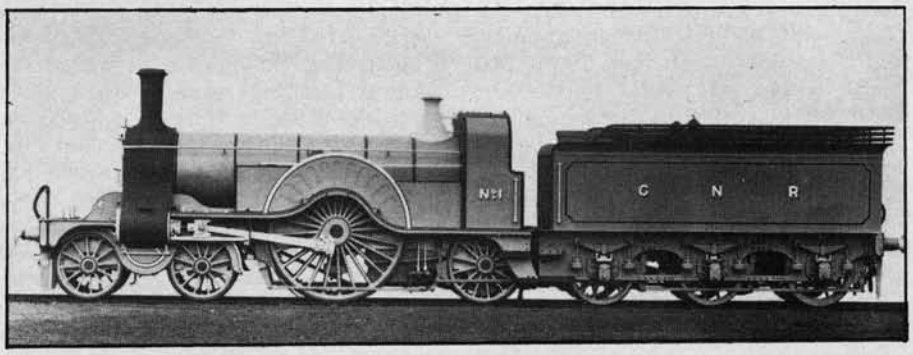

The first of Patrick Stirlings graceful 8 foot "singles"

the better engines of 1868 was the outside-cylinder 2-4-0 type introduced by B. Connor on the Caledonian Railway. This had either 6 ft. 8 in. or 7 ft. 2 in. driving and coupled wheels, cylinders 17 in. by 24 in., and a working pressure of 140 p.s.i. An unusual feature, common with Connor's "singles" of 1859, was the use of long travel valves, the lap of the valves being 1½ in., as against 7/8 in. to 1 in. used on most other locomotives of the period. The long travel valves allowed very free running of the engine, and economical use of the steam.

Patrick Stirling, one of the outstanding locomotive engineers of his time, took over his department on the Great Northern Railway in 1866, and at first followed his predecessor, Archibald Sturrock, very closely. His first express engines were of the 2-2-2 type, with inside cylinders and long wheelbase. Stirling was also notable for the introduction of his 8 foot "singles", which were of the 4-2-2 type with outside cylinders. The cylinders of No. I, the first of the 8-footers, were quite large for the period, at 18 in. diameter and 28 in. stroke; the working pressure was 140 p.s.i., the boiler being domeless. Stirling's later engines were all of the inside cylinder type.

At the same time as Stirling's 8-footers appeared (1870) some very fine 2-4-0 express engines were built by Matthew Kirtley of the Midland Railway. These, known as the "800" class, were built both at Derby and by Neilson & Co. from 1870-72. They had 17 in. × 24 in. cylinders, and 140 p.s.i. boilers. Kirtley's successor, Samuel Johnson, was impressed by the success of the "800" class and rebuilt them with larger boilers and new cylinders 18 in. × 24 in.; in some cases 18 in. × 26 in. One of these engines ran from Carlisle to Aisgill Summit, 48½ miles in 59 minutes, with a load of 130 tons. This route involves a rise of 1100 feet, with the last 11 miles at a gradient of 1 in 100.

F. W. Webb's 2-4-0 engines for the L.N.W.R. must now be mentioned. These were the "Precursor" class, with driving and coupled wheels 5 ft. 6 in. dia., and the "Precedent" class, with 6 ft. 7½ in. dia. wheels. The cylinders of both classes were 17 in. × 24 in. and the working pressure 140 p.s.i. A feature common to all L.N.W.R. engines at the time was an ash hopper below the smokebox, into which the ashes descended through spaces at the sides of the cylinders. Allan straight-link valve gear was used.

The "Precedents", also known as the "Jumbos", proved very successful and were used on express services for 30 years. After 1887, the working pressure was raised to 150 p.s.i., when new boilers were provided. One of the class, *Charles Dickens,* was said to have completed about 2¼ million miles before being broken up; however it is likely that most of the working parts had been replaced during the engine's career.

Hardwicke, No. 790 of the "Precedent" class, made railway history during the races to Scotland in 1895. She covered the 141½ miles from Crewe to Carlisle in 126 minutes. True, the train was a very light one of 70½ tons, but the run included the formidable inclines of Grayrigg and Shap. The maximum speed during the run is said to have been 92 m.p.h.

From 1876 onwards, the inside-cylinder 4-4-0 type of express passenger locomotive became very popular, and was built by a large number of British railways. One of the first, and a most successful type, was Dugald Drummond's for the North British Railway, 1876-78. These engines had 18 in. by 26 in. cylinders and 150 p.s.i. working pressure. Driving and coupled wheels were 6 ft. 6 in. diameter.

Compounding was a system much used abroad, and on the L.N.W.R. Webb made many experiments with compound engines, where the exhaust from the high-pressure cylinder/s is passed into the low pressure cylinder/s, in order to obtain the maximum amount of work from the steam before being exhausted to the atmosphere. Four classes of compound express engines were built at Crewe from 1882 to 1890. The first was *Experiment,* which had outside high-pressure cylinders driving the trailing axle and a single inside low pressure cylinder driving the middle axle. The h.p. cylinders were 11½ in. dia., and the l.p. 26 in. dia.

The second type of compound built by Webb had larger h.p. cylinders, at 13 in. dia. The boilers were similar to the "Precedent" class, but with the higher working pressure of 150 p.s.i. An arrangement was made so that steam direct from the boiler could be admitted to the l.p. cylinder. *Experiment* was later altered to conform with the 13 in. engines.

The next Webb compounds were the "Dreadnought" class, the first of which was completed in September 1884. These locomotives were considerably larger than the earlier compounds, the two h.p. cylinders being 14 in. diameter and the single l.p. cylinder no less than 30 in. diameter, the stroke being 24 in. The driving wheels were 6 ft. 3 in. dia. and the working pressure 175 p.s.i. An interesting feature, patented by Mr. Webb, was the reversing gear, which was arranged so that the high and low pressure valve gears could be operated either together or independently.

Starting was poor with the "Dreadnoughts", mainly owing to the small size of the h.p. cylinder, and an arrangement was then added to allow the exhaust from the h.p. cylinders to pass directly to the blast pipe, relieving the back pressure on the h.p. pistons. This did not however effect much improvement.

The next class of Webb compounds were the "Teutonics", of which three were built in 1889 and seven in 1890. The

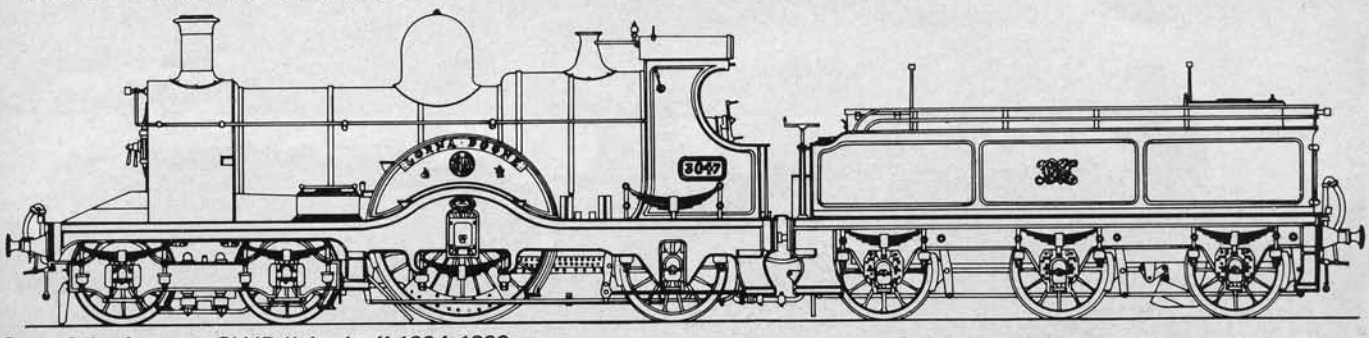

One of the famous GWR "singles" 1894-1899

TOOLS OF THE TRADE

Rex Tingey looks at the UNIMAT SL

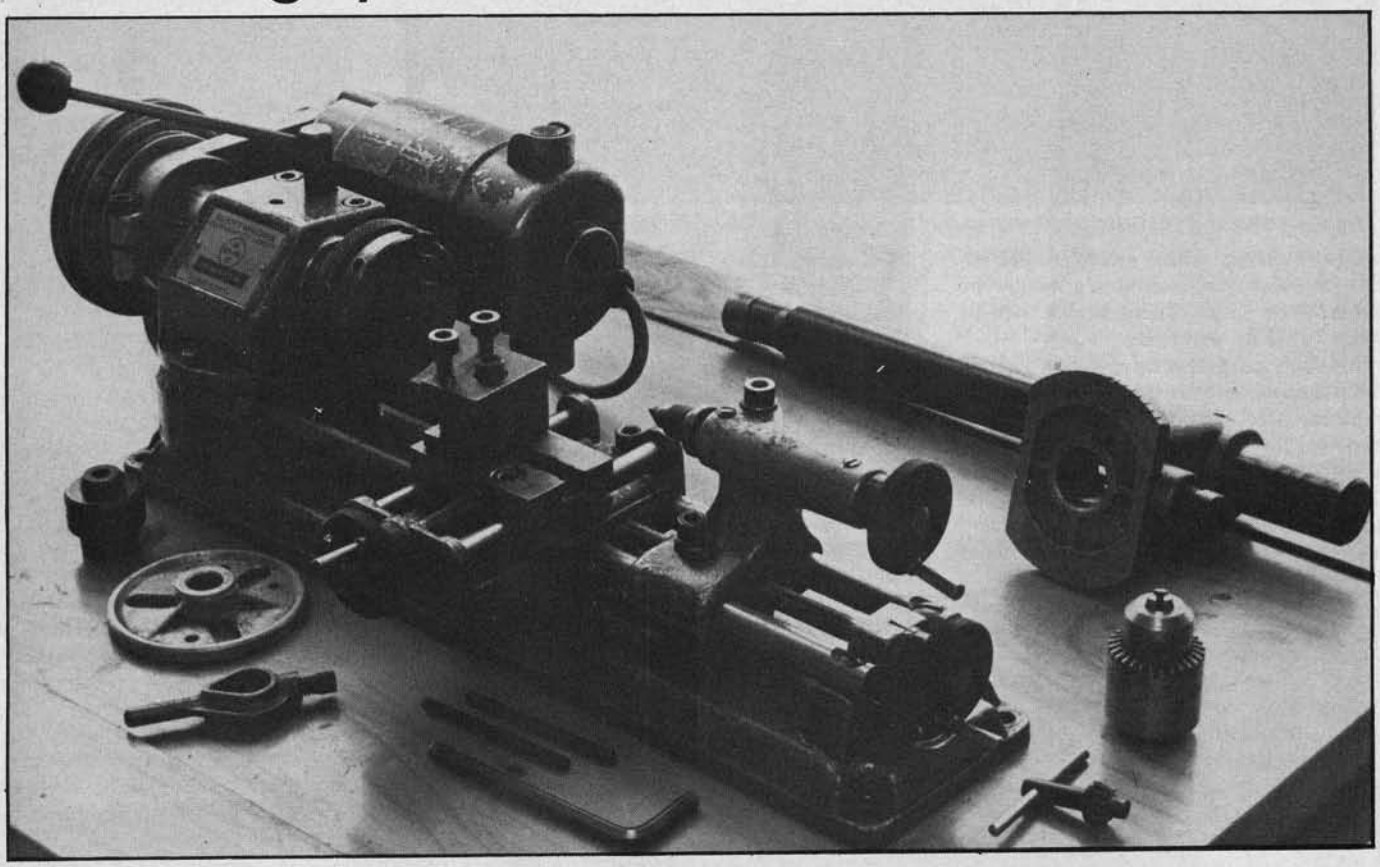

The basic Unimat S.L. outfit

THE UNIMAT SL first appeared on the market in the 1950's and was very similar to the SL models available today — or perhaps yesterday — the SL has been withdrawn from production since the great success of the recent Unimat 3. The makers intended to manufacture both lathes side by side for some time to come, but the Unimat 3 has been such a success that the Unimat SL has not been selling, and so, unfortunately, it has been withdrawn. The manufacturers assure me that spares will be made and be available for ten years, and so the secondhand market will thrive.

The major reason that the Unimat 3 has sold over the SL is because apparently the price of the basic SL is only a little lower than that of the 3, the much improved model. The price difference is in fact quite large since the basic SL outfit is complete with drill chuck, 3-jaw chuck and vertical column, plus a grinding wheel attachment, whereas, with the Unimat 3 the basic lathe set does not include these items, and they have to be paid for as extras.

The Basic Outfit

Since your Unimat SL may have to be bought on the secondhand market it is as well to know what comprises the complete outfit. My SL was purchased in 1975 and consisted of the bed complete with headstock, tailstock, drive motor, cross-slide and carriage, and headstock feed lever. Also provided were a large and small drive belt, two centres, a face-plate and lathe dog, an allen key for most of the adjusting screws, a tool-post, a grinding wheel holder and a T-slot screw. The largest extra part was the vertical column with a casting to hold the headstock. Also included were a three-jaw chuck, with a machined-to-the-lathe backplate, and a drill chuck. The last two items are exluded as part of the basic set in the handbook, but were part of that sold on the British market. The handbook with the lathe states that the drive motor is 90 watts, but the motor plate shows it to be a 95 watt motor.

Age of the SL

Possibly the best guide to the age of a particular SL is the wattage of the motor. The first models had a 40 watt, then they progressed up through 75, then 90, finally ending up with the 95 watt motor, which is reasonably powerful, but not a modern high-efficiency design.

Another tell-tale is if the handwheels fitted are made of metal or black plastic. The plastic ones were introduced in early 1975. If the lathe is a recent model it will either be fitted with the black plastic handwheels or have homemade ones fitted; the metal handles fall out of the plastic after a slight knock, and the threads wear out if they are stripped off often.

Technical Details

From the handbook.

Lathe	Height of centres over pillars	1 13/32in
	Width between centres	6 ¾in
Drilling and milling	Drill height	3 7/8in
	Overhang	3 3/8in
	Drill travel	¾in
Grinding	Maximum diameter of wheel	2 3/8in

The Lathe

When turning between centres the centre height maximum allows a diameter of 2 13/16in to be swung, however, this

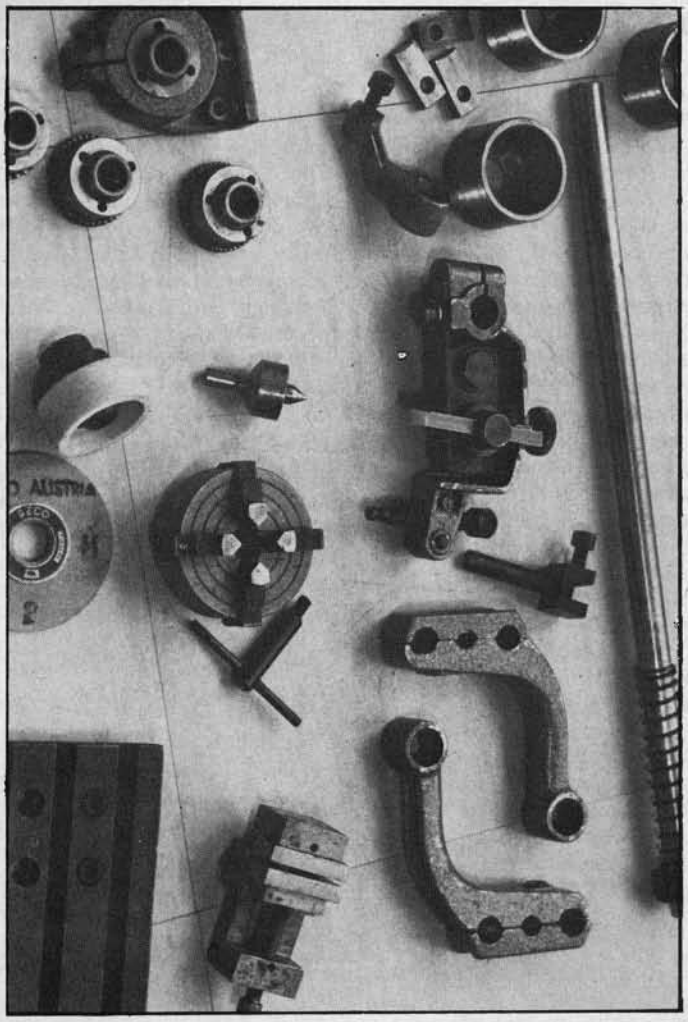

Useful accessories. Threading attachment, indexing head, live centre, 4 jaw chuck, machine vice grinding wheels and milling table.

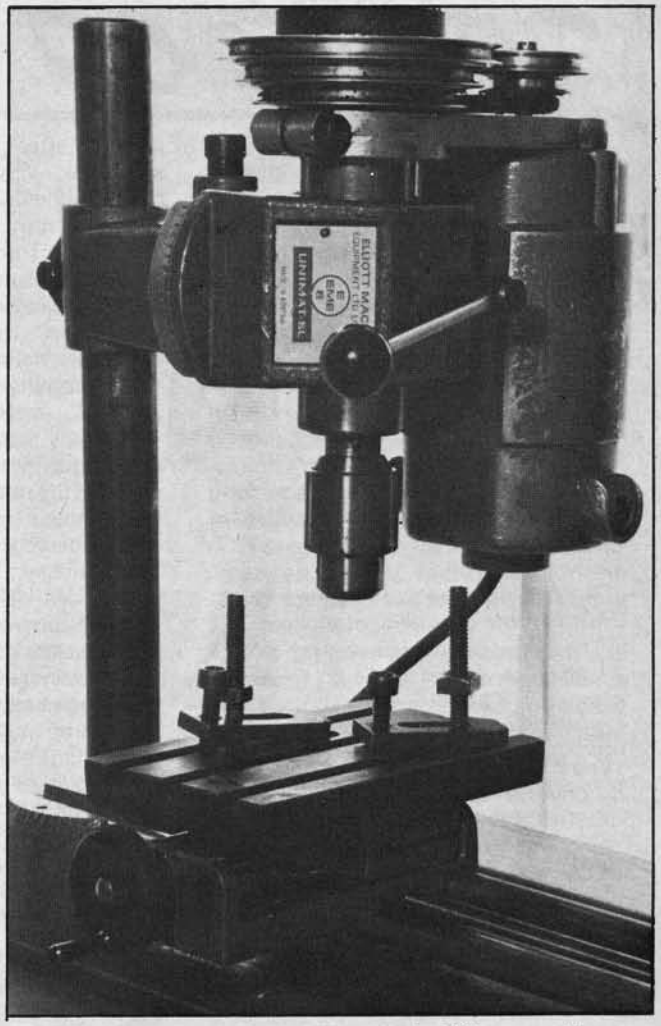

The Unimat SL set up a milling and drilling machine.

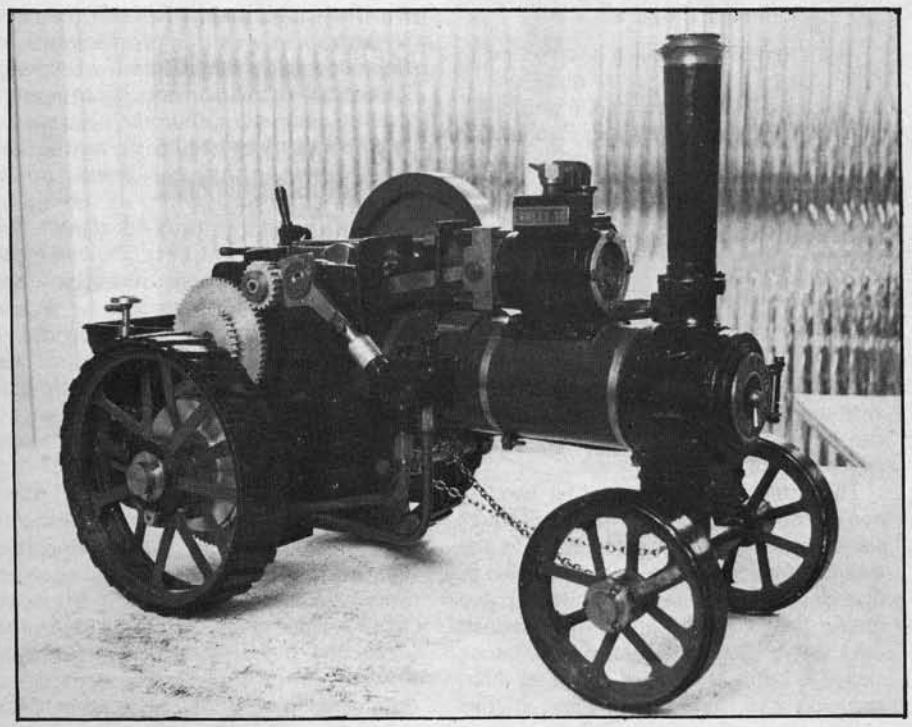

Sweet Sixteen was made on the Unimat SL Lathe

may be further restricted as the work has to be held to be turned. The jaws of the chuck will be extended, usually, to hold the diameter and the extra room required for the extended jaw to miss the bars will limit the swing further.

The tailstock and the carriage which carries the cross-slide are mounted on two 12mm diameter bars which are fixed to the bed at each end. The headstock end is raised and milled flat, and the headstock can be swivelled on this for taper turning. The headstock can be removed as a complete unit with drive motor mounted on a plate with an intermediate pulley. The plate secures to the hollow main drive spindle sleeve, which can be made to move back and forth in the headstock block by means of a feed lever. The drive spindle runs in two ball races. The tailstock is loosened by a single screw and moved into place along the bars, it has an internal drive mechanism for drilling and fine adjustment by means of a handwheel.

The carriage is driven along the bars by a feed screw between the bars, with a handwheel at the right hand end. The carriage can be locked onto the bars. On the carriage are two smaller diameter bars and a central feed screw for the cross-slide, worked with a handwheel.

Advantages:
a. Parts are simply and cheaply renewed if wear takes place.
b. Swarf and fluids drop straight through the bars and are easily cleaned away.
c. Accessories and additions can easily be fitted to the bars.
d. The headstock height can be readily increased by the addition of a block, sold as an accessory.
e. The headstock feed makes certain flycutting, drilling and boring operations possible.
f. The hollow spindle allows long materials of narrow diameter to be fed in for turning.

Disadvantages:
a. The bars limit the size of the workpiece without the possibility of a gap.
b. The bars tend to flex and to vibrate leading to chatter marks on the work.

Motor and Drive

The motor is mounted on a drive plate and drives an intermediate three position pulley with its own three-position pulley. The drive spindle has a large three-position pulley, so between the direct and intermediate drives nine different positions are possible. An accessory slow drive plate is available which provides a second intermediate pulley position and gives two more, slower, speeds. The motor and drive plate fit directly onto the main spindle sleeve and make the headstock a self-contained unit.

Advantages:
a. The self-contained drive unit makes the headstock unit available for vertical use, for taper turning, and various different positional uses.
b. Pulley system gives a wide range of speeds, simply, for the various functions.

Disadvantages:
a. The rubber belts stretch and slip under load, and tend to break quite easily. Keep spares handy.

Vertical Drilling and Milling

For milling and drilling, the vertical column is used, removing the headstock from the bed and fitting the column into the hole thus left. The headstock is then bolted onto the casting, and the spindle sleeve loosened to provide the downward motion. The carriage then has to be driven by means of its feed screw up to the head end. The cross-slide will need to be fitted with either the machine vice or the milling table for most operations in this vertical mode. Both the vice and the table are accessories and the latter comes complete with two clamping claws.

In use the drill chuck holds the end mill or twist drill, the work is held down firmly and the clamping screw of the casting loosened to bring the tool nearly to position, after clamping the drive can be advanced with the feed lever. The headstock can be angled to about 45 degrees from the vertical in either direction. The indexing head is a particularly useful additional accessory for drilling, milling and cutting gears.

Advantages:
a. The vertical mode extends the range of the machine tool considerably to cover many operations which would normally require other machinery.
b. With the indexing head and the vertical mode the range of accurate machining operations can be extended considerably.

Disadvantages:
a. Position of vertical column limits maximum movement to that of the cross-slide travel.
b. The minute movement of bed and carriage bars often limits accuracy and finish of work.

Criticism:
The clamps supplied with the milling table tend to pull their stems out of the T-slot heads when heavily clamped.

Chucks

Four chucks are available. The three-jaw is a self-centring type with reversible jaws. The four-jaw requires independent adjustment of each jaw, each of which can be reversed. The drill chuck is self-contained, and the collet chuck is an accurate self-centring chuck for small diameters. All four chucks will pass material, up to a certain diameter, right through.

The three- and four-jaw chuck tend to break parts of their jaws, quite easily, when the jaws are extended in particular, but these are easily replaced. Sets of soft jaws can be bought for the three-jaw for cutting to shape for a particular job. The four-jaw chuck does not have a separate backplate on more recent models.

Threading Attachment

The threading attachment clamps to the bed of the lathe and allows the threading of work between centres, or, with the three-point steady-fitted, work can be held by just the three-jaw chuck, necessary for internal threads.

The attachment needs to be used in conjunction with the three-jaw chuck since the backplate is used to hold the threading leader. Leaders are available to give 20 different threads in Whitworth and metric leads, they are drum shaped devices which require that the headstock sleeve is brought forward about an inch, reducing the turning capacity in this mode, although a narrow diameter can still pass through.

The threading system employs a spring-loaded back spindle holding the arm and follower, and the adjustable arm and its cutter. The adjustable arm has a guide screw which rests and travels on the cross-slide. The attachment is rather cumbersome, but it does its job well and is an essential item if accessories and attachments are to be made to fit the lathe, for improvement. Note that the outfit includes a cradle for cutting internal threads.

Some Other Accessories

The automatic feed attachment fits under the bed of the lathe and is a useful device for obtaining a first class finish when turning.

Various grinding attachments are available, but it must be considered that after grinding wheels have been used a careful clean-up is always required if excessive wear resulting from the grinding dust is to be avoided.

Single and double live centres (with ball races) are useful accessories and may be used for most work in place of the dead centres, and need no external lubrication.

The steady rest is a three-point steady for holding the end of the work when the tailstock cannot be used, such as when boring longer pieces.

The milling arbour with its module cutters is an attachment for cutting gears, used in conjunction with the indexing attachment. The cutters are expensive.

Conclusions

The Unimat SL is an extremely versatile small machine tool. It is easily adaptable to perform a wide range of engineering functions. It is small, and worksize is limited by this, also, if care is not taken to avoid overstressing then the bars will flex and inaccuracies result, or at the very least, chatter marks will appear on the work.

However it is well designed and deserving of more respect from the model engineer. It is capable of an extremely long working life and would be a good second-hand buy for the beginner. It needs little servicing and takes up very little room, is portable and can be used anywhere where a power supply is available.

Improvements

I have made many improvements to my own SL, reducing the flexing and increasing its versatility. The two major improvements are perhaps the toothed belt, positive drive, and the fitting of an underbed to shift the vertical mode to the back centre. These modifications are all contained in my book *"Making the Most of the Unimat", together with improvements to the Unimat 3.

*Published by Argus Books Ltd, Price

The Workshop

By Andy Smith

LIKE THOSE OF YOU reading this new magazine, ever since I can remember I've been interested in mechanical things. And it will give you some indication of my years when I say that my early interest was fuelled, but never completely satisfied, by such pastimes of the period as fretwork, Meccano, Hornby railways and a perusal of the catalogues of Bassett-Lowke, the contents of which, as a family, we could never afford.

During most of this time I have had a workshop of some sort or other and it was many years before I realised that the real fascination lay in the workshop rather than in the particular mechanical hobby in which I happened, at that moment, to be involved. In other words, the pursuit of a practical hobby is as, if not more interesting, than the hobby itself.

The planning and building of some project in the workshop, whether it is a model steam locomotive or a bookcase, is a fascinating process, which will require hours and hours of constructive thought followed by long periods of the exercise of manual skill and dexterity; whereas the completed loco will only take you for rides around the garden, and the finished bookcase will hold the bound volumes of *Model Mechanic*. Both of the latter, I hasten to say, laudable pursuits but nothing to compare with the pleasure you have enjoyed during the periods of planning and building.

If we were going to give descriptive titles, I think I would describe my workshop as being that of a *Model Mechanic*. "Model", because the work carried out there is, I hope, as near as I can personally achieve to the correct way of doing things with my limited facilities, and is not "slip-shod"; as well as for the usual connotation of making miniature items of full-size engineering equipment. Although in the latter case, if I build a boiler for my four metre (13 ft.) steam launch it may be miniature but it is certainly not a model! "Mechanic", in that we are dealing with mechanical devices, tools and equipment, and apart from that, because I like this old descriptive term and would like to see it again raised to the respected position it once held. After all, James Watt and George Stephenson described themselves as "mechanics", and they knew a thing or two.

In these columns our intention is to help you set up and develop a simple "mechanics" workshop and occasionally describe the making of some model, mechanism, tool or piece of equipment to assist your efforts or provide an interest. Treating this as just such an occasion, here is a strange and fascinating apparatus that can be built with the simplest of tools found in the usual household.

Harmonographs

If you are a parent or grandparent, this will provide hours of amusement for the kids, while should you be at the other end of our age range, i.e. a young teenager, this device is guaranteed to get the old folks away from the goggle-box so that you may watch the "Old Grey Whistle Test" in peace.

This device consists of two rods moving under no apparent power and producing designs of a strange and attractive nature. To describe the harmonograph in less poetic terms one could say, it is an instrument for recording on paper, or some other suitable surface, the figures described by two or more pendulums acting in concert.

A simple form is shown in figure 1. Two pendulums are suspended on points so that their respective directions of movement are at right angles to one another. Thus pendulum "A" can swing only in a North-South direction, and pendulum "B", East-West. The top of pendulum "B" carries a platform on which a piece of paper is fixed to take the trace. Pendulum "A" carries an arm, one end of which is hinged to permit it to rise and fall and the other carries the pencil or pen.

The weights may be clamped at any point on the pendulum rod so as to vary the rate or period of swing. The shorter the distance from the weight to the point of suspension, the shorter will be the period of swing.

If the position of the weights are adjusted so that each pendulum has the same period, they are said to be in unison.

The interest of the harmonograph, however, centres round the fact that the periods of the pendulums can be varied relative to one another. Thus if "A" is set to swing twice to "B"s three times, an entirely new set of figures will result, and the variety is further increased by altering the respective amplitudes of swing and phase of the pendulums.

These simple devices are such fun that I looked up some details on the subject and found that the figures produced apparently have a similarity to musical terms.

In the case just mentioned, the period rates of "A" and "B" are as two to three. Now, if the note C on the piano is struck, the strings vibrate a certain number of times per second and give a certain note. If the G above C is struck, a note will result from strings vibrating half as many times again per second as did the C strings. hence the "Harmony" of the

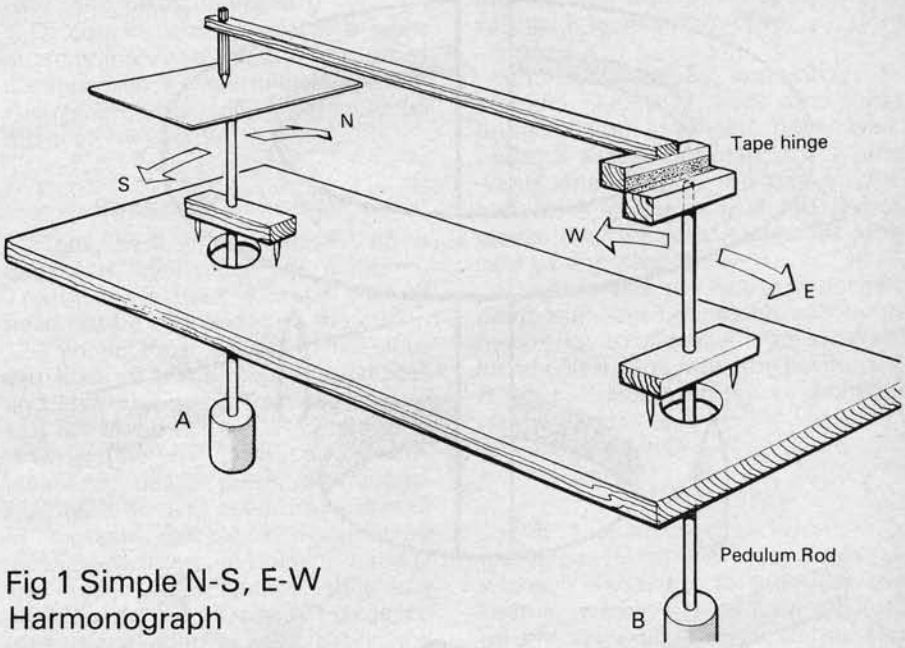

Fig 1 Simple N-S, E-W Harmonograph

pendulums when so adjusted is known as a "major fifth" — the musical chord produced by striking C and G simultaneously.

In like manner, if "A" swings four times to "B"s five times, you get a "minor third; once to "B"s twice, an octave, and so on.

A completely fresh field is opened if, for the one-direction suspension of the pendulums we substitute a gimbal or universal joint, permitting movement in all directions. Figure 2 shows how the various parts are made, metal, plastic or wood being used.

The interested reader may experiment as he wishes with all manner of set-ups, each one of which will trace many interesting harmonograms.

For the pendulum rods, ¼ in. (6mm) diameter mild steel or aluminium rod has been found most suitable, while the weights are slices from a larger diameter bar. We have made some by filling small bean tins with plaster of paris and drilling a hole through the middle for the rod to pass through. The weight is retained in place by means of a 2 BA screw through a tapped hole or a simple clamp in the case of the weighted can.

Two forms of suspension are shown, one giving a simple north-south motion, while the other gives universal motion, and no great degree of accuracy is necessary in construction.

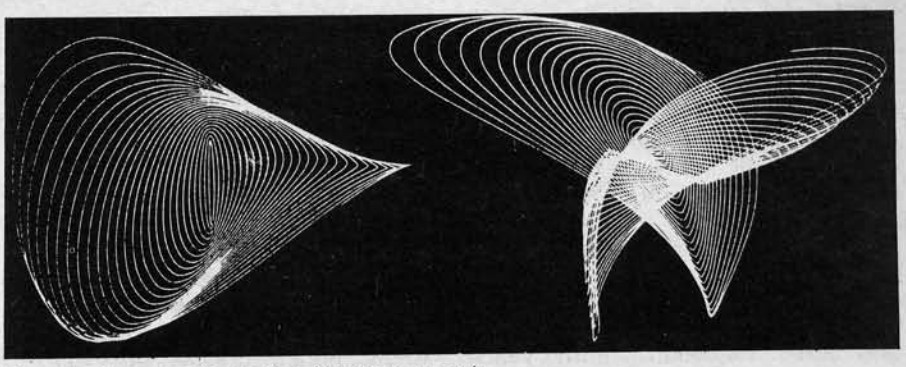

Two designs made by the Harmonograph

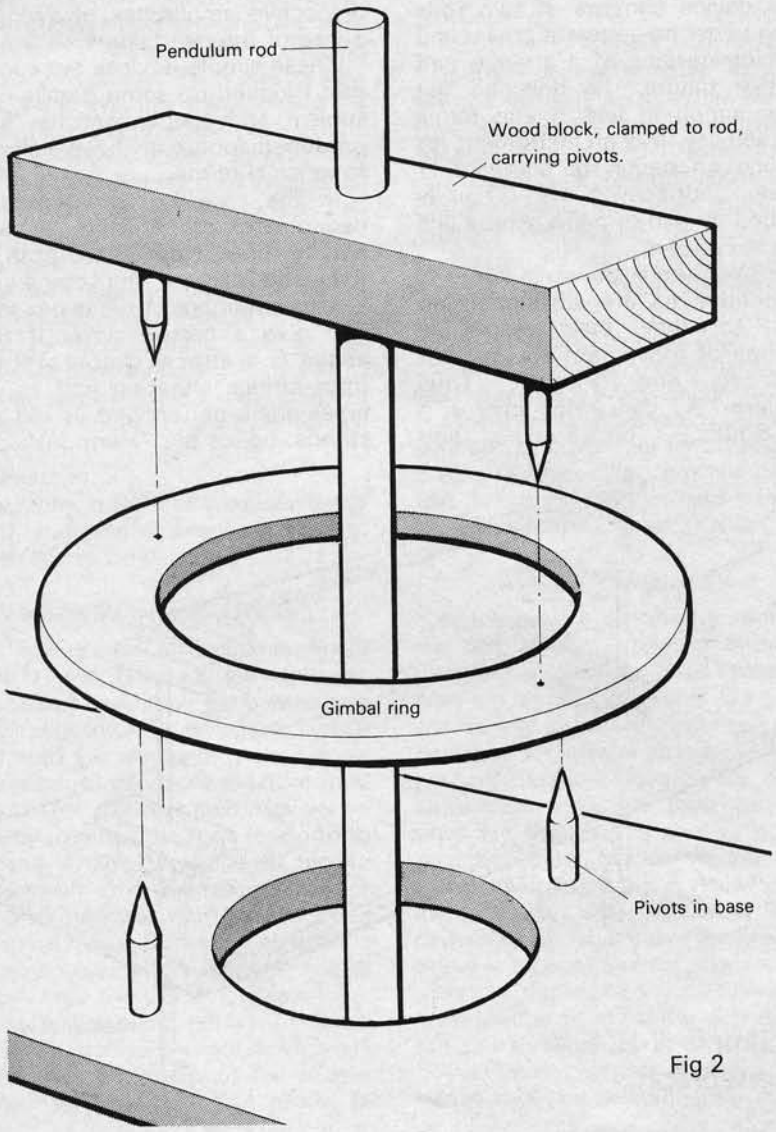

Fig 2

In harmonographs made by the writer for demonstration purposes, ball-point pens have generally been used. A finer and clearer outline can be obtained from an inking pen made by drawing out a piece of glass tubing in a bunsen flame. The tube should not be drawn too fast or the points will be too long to be of any use — about ½ in. of taper is enough. The sharp edge of the point is rubbed off on a fine oilstone. The finer the remaining point (with due regard to the diameter of the hole) the finer will be the ensuing line.

Many years ago, draughtsmen wanting to ink drawings with very fine lines used this technique. These inked drawings with all the different parts given a wash of a different water colour were works of art that we are unlikely to see again. I have not tried using a modern type of inking pen — which is simply an up-to-date version of the glass tube — but it would be a good idea if you get really smitten with harmonographs. Actually, if you really want to go to town, Staedtler, and no doubt other pen makers, make special plotter points, designed for use in programmed draughting machines. But I think for most of us a simple ball-point will suffice.

Of the various harmonographs, the most interesting is the twin-elliptical type. On this type every ratio has two forms: (1) If the pendulums are working against each other there will be loops or points on the outside of the figure, equal in number to the *sum* of the figures in the ratio. (2) If the pendulums are working with each other the loops form inside the figure, and are equal in number to the *difference* between the figures of the ratio. So the range of alternatives is considerable.

Warning

I must add a word of warning — harmonographs are wonderful time wasters, hours can be spent just playing with them. I have vivid recollections of the break-up which took place at a meeting of a so-called learned society when all the members wanted to produce pretty patterns!

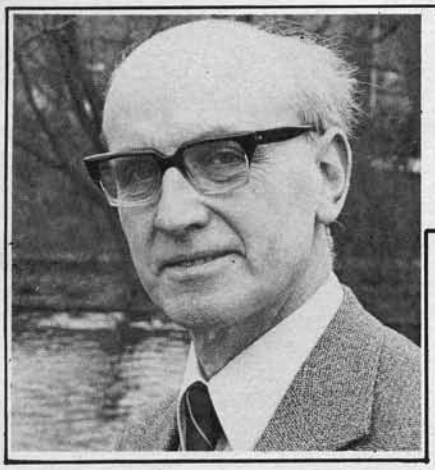

Cyril Freezer introduces

MODEL RAILWAYS

A MODEL RAILWAY is rather big. Even a little one is about ten feet long, and is apt to be more than a slight nuisance around the house. Ideally, you need a spare room, but then, who doesn't? In practice, barring a lucky strike, the separate railway room is a fairly late development in one's progress in the hobby. In the early stages, some compromise must be made.

The Portable Layout

The most obvious answer is the portable layout. To many beginners, it must be a single baseboard. This is a dead-end, because, even in N gauge you need something the size of a door on which to build a worthwhile layout. Have you ever tried moving a door around the house? For 00 you need something bigger, so big that it won't go through the doorway. No, a portable layout is built in several sections.

Technically speaking all layouts one sees at exhibitions are portable, but the larger ones are produced either by a club or a small syndicate. Only the smaller, private layouts are truly portable in the sense that they can be erected and maintained by a single enthusiast.

The practical limit of a private portable layout is as much set by the storage space as by the area in which it can be erected! Today, a further consideration is the family car. Four to six baseboards measuring 1m × 0.5m can usually be stowed inside without difficulty and since this also represents the maximum amount that can be stowed in the average modern home without too much disturbance, present day thought suggests that something along these lines is ideal.

The most favoured scheme for such a layout is the small terminus — fiddle yard model. For various reasons an L-shaped format is favoured: it allows a reasonably long run along two walls of a room, and is rather more stable than a long straight layout. Such a scheme is shown in fig 1.

Usually a branch prototype is chosen. This arose in the late 1940s when one either built everything or went without. Under these conditions a layout that only needed three locomotives to provide simple variety made sense. In the altered conditions of the 1970's a busier main line style is advisable, this allows for a better operating potential and wider choice of locomotives.

However, it is possible to build a continuous layout using four to six rectangular baseboards. Fig. 2 shows the basic arrangement of boards. I have not sketched in a detailed layout, largely because the basic scheme is obvious, the details will vary according to the user's ideas.

Storage

It is very easy to forget that a portable layout has to go somewhere when not in use, and that unless that somewhere is neat and tidy, there will be trouble. Indeed if no cupboard is available, one of the best solutions is to build the main station so that the rest of the layout can be stored underneath, Fig. 3 gives the idea. In really elaborate arrangements, the would-be panels cross the base to hide the baseboards, and a lifting cover to hide the model from view and protect it from dust and accidental damage. All too often, old curtains are used around the base and, at best, a plastic sheet covers the top. And some people wonder why their wives complain!

Of course, if the model is a really outstanding one with first class scenery then it is worth looking at. In such cases, the solid top could be replaced by perspex.

Bookcase Schemes

From here the principle of a bookcase layout can be explored. The idea is simple: a model railway need not be very wide: no more than 12-15in. in most cases. If one lines the sides of a room with bookcases and low cupboards then the railway can run along the top. (Fig. 4).

Unfortunately like so many plausible ideas, there are snags. Mainly, it doesn't seem to work well in modern combined living-dining rooms, which are, in opinion, already so loaded to capacity that the addition of a model railway makes the idea unworkable. In most cases, the problem is T.V. interference — in reverse since the presence of the family T.V. effectively prevents the modeller from exercising his craft.

Folding and Lifting

Before I move outside, I'd like to pass quickly over two ideas, one is the folding layout.

Basically, the idea is to arrange the baseboards to fold flat against the wall. (Fig. 5). It's a good one, it works, but there are two snags. The first is that all the stock has to come off before you lift, which means not only that you have to remember to take it off but that it isn't a quick job to open or shut the railway. There is also the not inconsiderable problem of having somewhere else to put them afterwards. Finally, because one is limited, in practice, to about 5 ft. 0 in. in height above the hinging line, the maximum practical size is roughly 8 ft. × 4 ft. There is one final point, it is absolutely essential to so arrange matters that the baseboard cannot come down by accident, which means not only that you need substantial hinges, but you need strong latches and, preferably counter-weights.

Needless to say, such a structure must be strong, and has to be fixed to the wall. Unless you are a sound carpenter, or can afford to employ a skilled craftsman, it isn't a very good idea. You want it to fold, not fold up on you!

The other bright idea is to suspend the layout from ropes fixed to the ceiling. It sounds attractive.

Forget it.

When I was an apprentice, in London Docks, I had one thing drummed into my head, never walk under a suspended load, for it only wants one sling to slip and you've had it. A ceiling suspended layout makes the Sword of Damocles look safe by comparison.

There is also the not unimportant point that few houses have enough headroom to allow you to slice six inches off it. You must, by law have 7 ft. 6 in. headroom in a habitable room.

The Garage

The suspended layout is marginally feasible inside a garage where it is easier to fix pulleys to the beams, where the general ugliness of the scheme doesn't matter and

the probability is that if the railway does fall it will only do a limited amount of damage to the car. However, if you do opt for the garage then it's a lot easier to build a permanent layout around the walls. Set at about 3 ft. 9 in. above floor level, one can even build a railway high enough to drive the car bonnet underneath.

There are two snags with a garage layout. The car comes in damp, and dampness doesn't really agree with most models. The second is that you have to be very far-seeing in the design. You may only have a mini at present, but you could possibly need a larger car in time.

Spare Room and Loft

Backtracking into the house, one good answer lies in a general activities room. Reverting to the bookcase scheme, if you have relatively narrow baseboards around a moderate sized room, there is enough space in the middle for other activities. Let's bring in a sewing machine and a worktable and we have a room where two practical hobbies can be carried out.

Of course one needs space. With older houses, a loft conversion is feasible. It isn't quite as simple as it sounds. For a start, the joists are generally not strong enough, then you need to arrange ventilation and lighting, not to mention a proper access. On modern houses there is rarely enough headroom and the prefabricated roof trusses come in the wrong places. It's going to cost a fair bit, in time and money, but as a long term scheme it is very popular. Again, because of the size, it is feasible to make it a multi-purpose area.

Garden Shed

A garden shed or home extension make good sites for a permanent layout. Here total costs are easily estimated — just add about 50 per cent to the basic price of the shed for the baseboard and other special features you'll need. Of the two, the house extension is best, it doesn't take you out of the house, but you're out of the living area. This seems to suit everyone.

But let's get back to the garage. A normal single garage is at least 18ft. × 8ft., some are 20ft. × 10ft. This is a very convenient site for a model railway, not too big to create problems, large enough to give plenty of scope. The problem is getting rid of the car.

One answer is to convert it into a double garage. If there is sufficient room, this is the ideal answer because, providing you have access to a public road, then there will be no problem getting planning permission. On top of this, if you ever need to sell the house, you'll see most, if not all of your money back.

A more economical answer, where possible is to erect a car port. Modern cars are supposed to be much better if left out in the open, apparently the mositure they bring into a garage doesn't do them any good either. Of course, this can only work if the garage is located to the rear of the house. A rather simple solution is to sell the car. If you have reasonable public transport, it will probably save money. You can pay for a lot of taxis with the £50 licence fee, while the insurance will meet most of the necessary fares. You'll save on the garage bills and petrol, and have a couple of thousand pounds with which to build the railway.

To be continued.

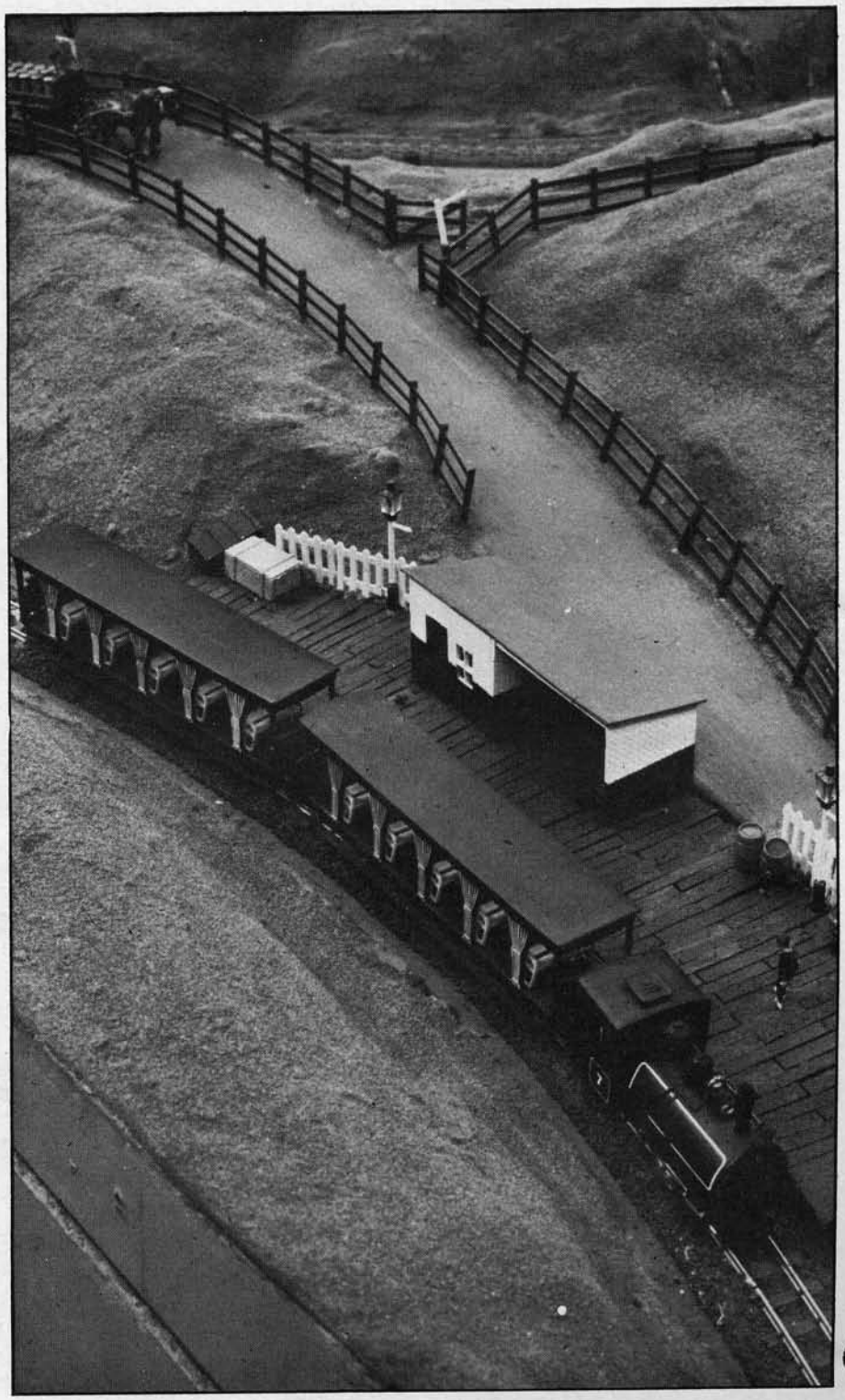

A coner of the narrow gauge section of Dave Howsam Porthleven

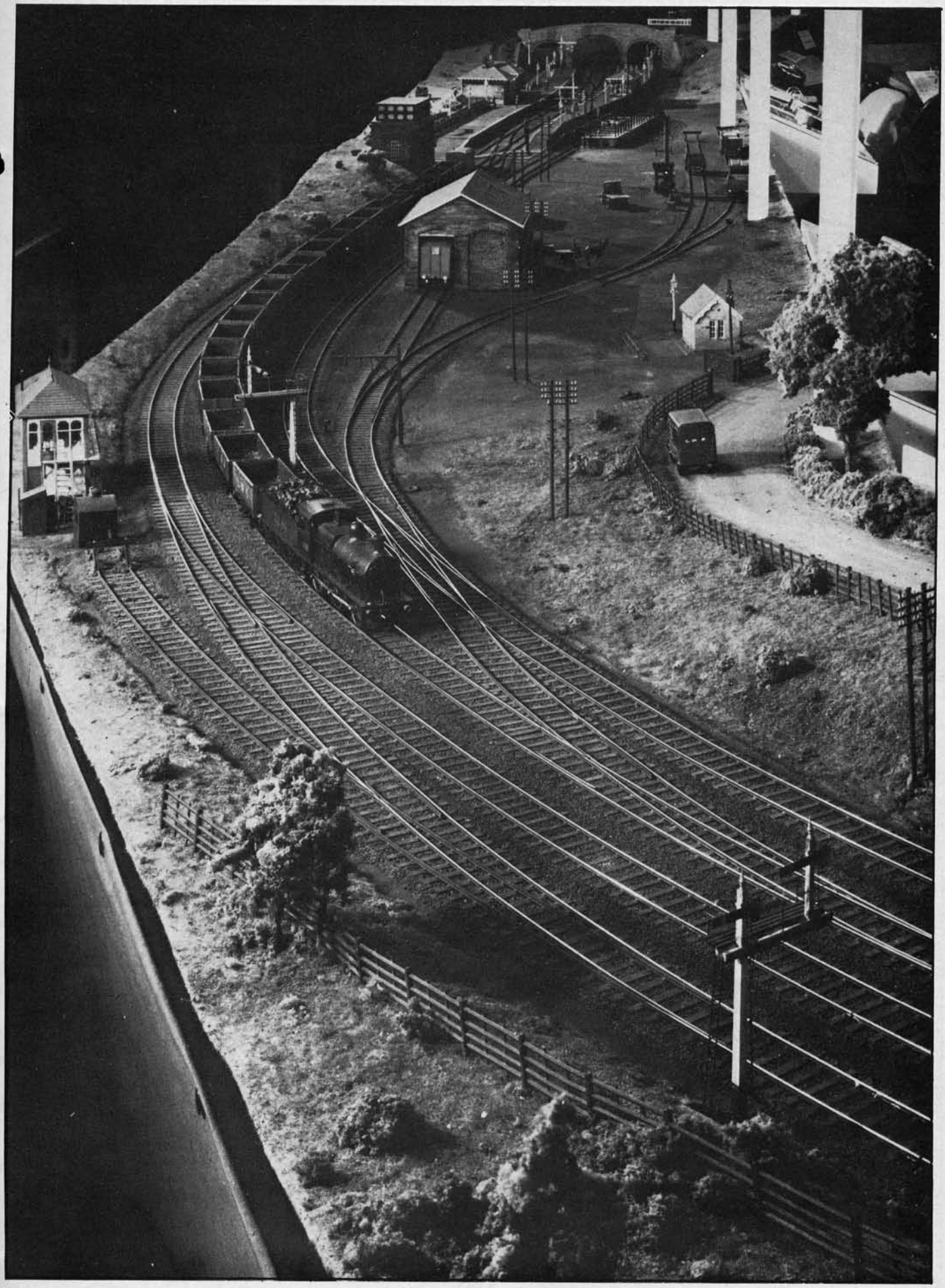

Heckmondwike the North London Group's famous 18.83mm gauge, 4mm scale model of an imaginery section of the LMS in the 1930's

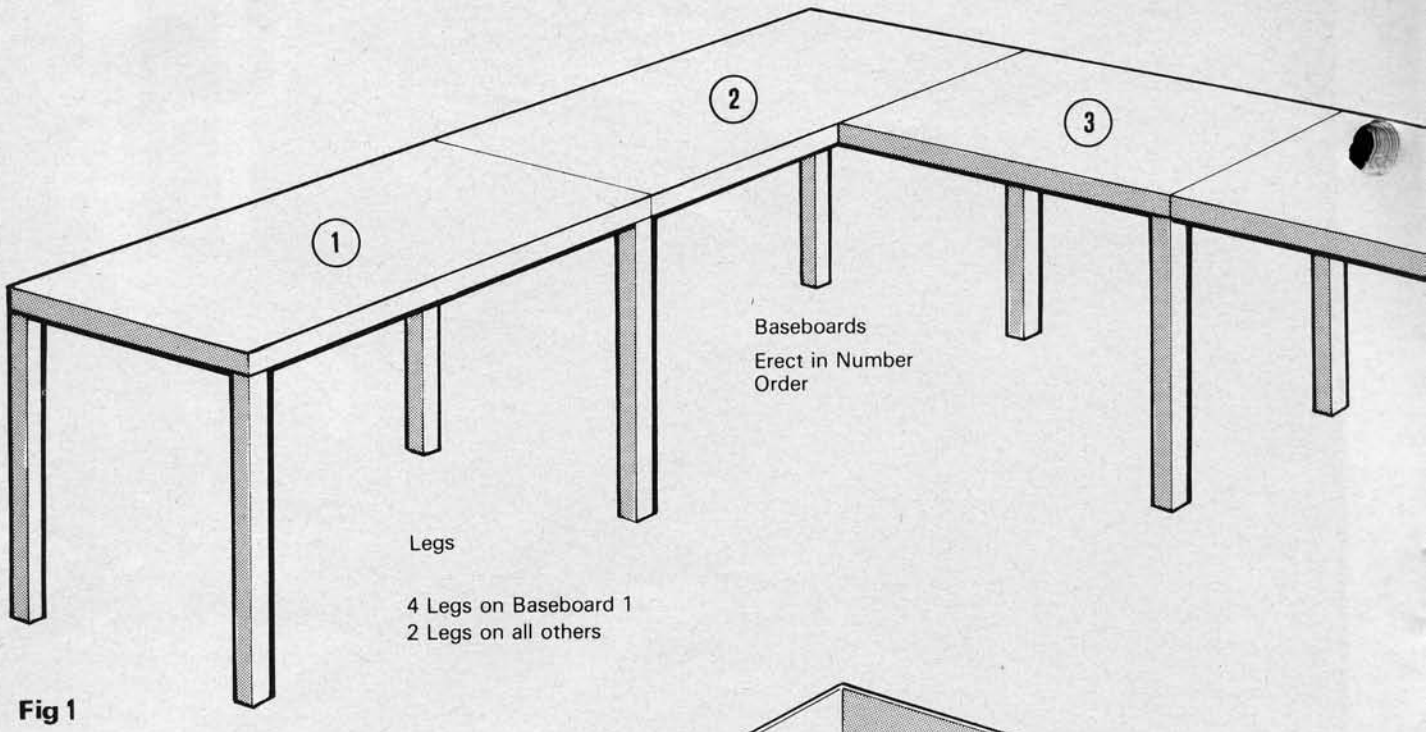
1
2
3
Baseboards
Erect in Number Order
Legs
4 Legs on Baseboard 1
2 Legs on all others

Fig 1

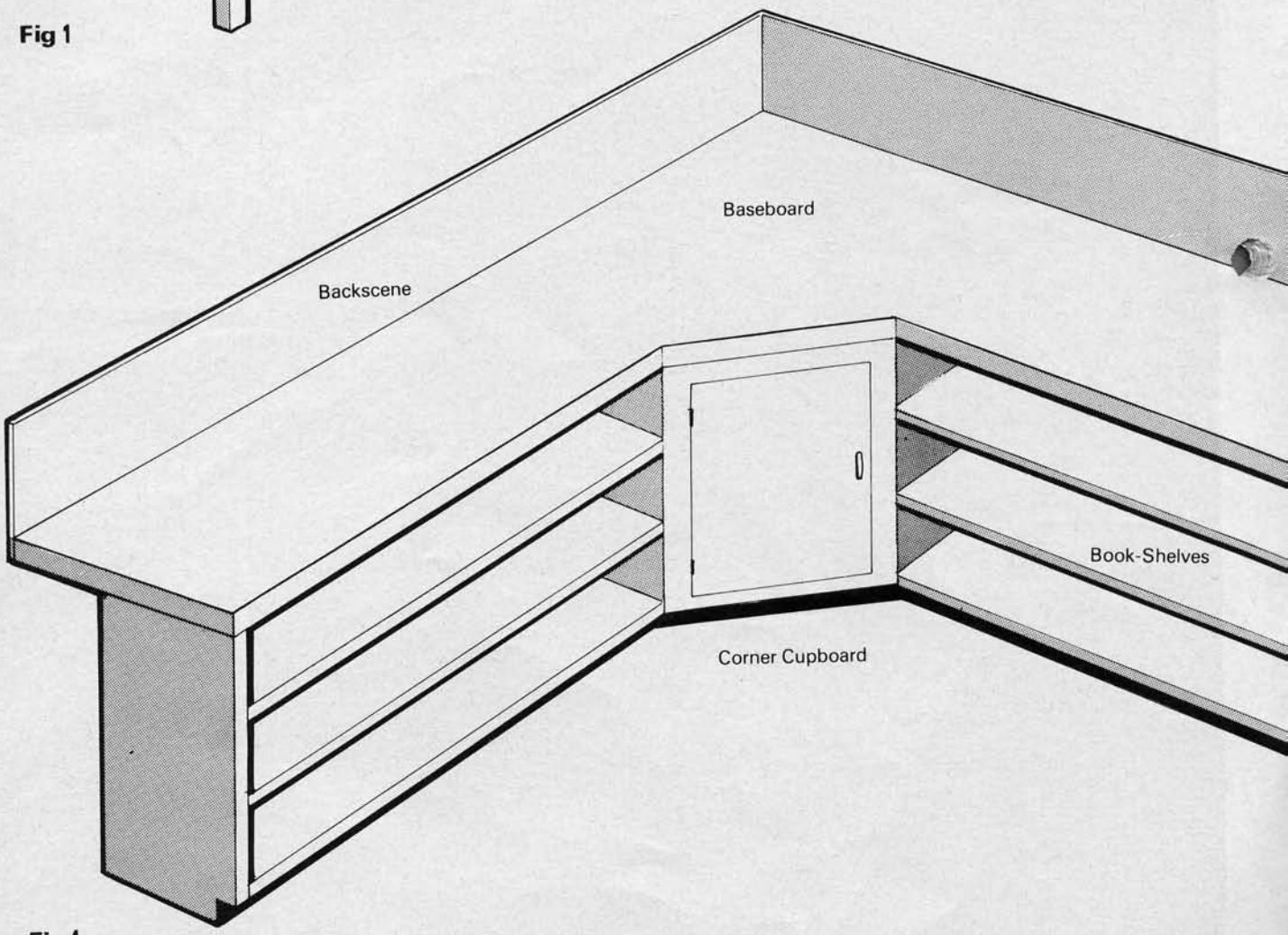
Baseboard
Backscene
Book-Shelves
Corner Cupboard

Fig 4

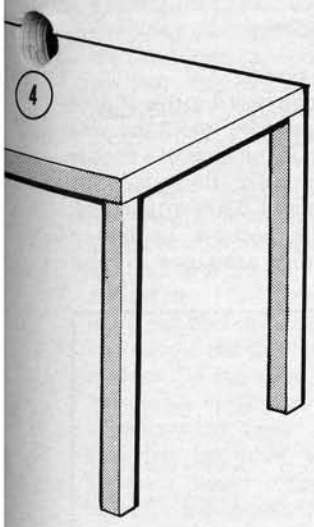

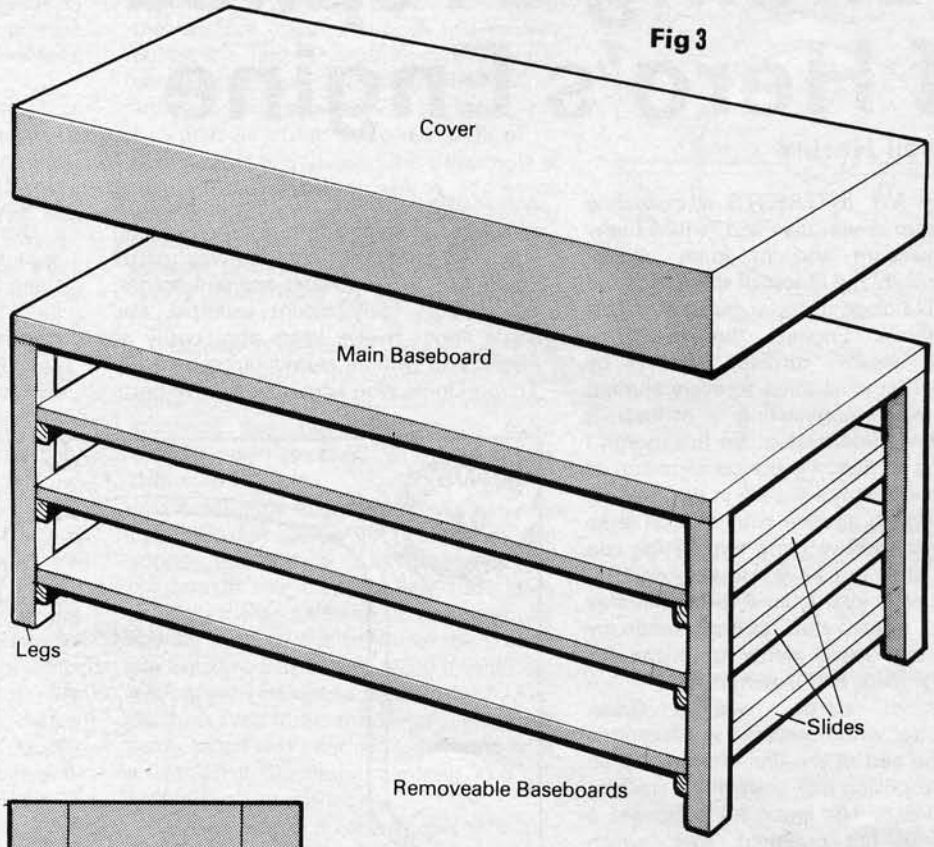

Fig 3

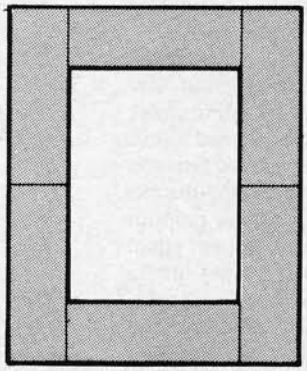

Fig 2

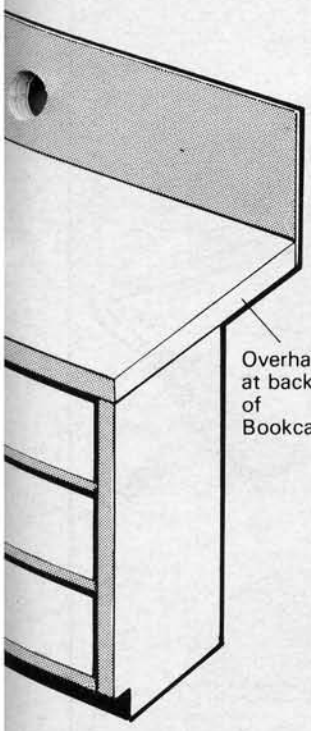

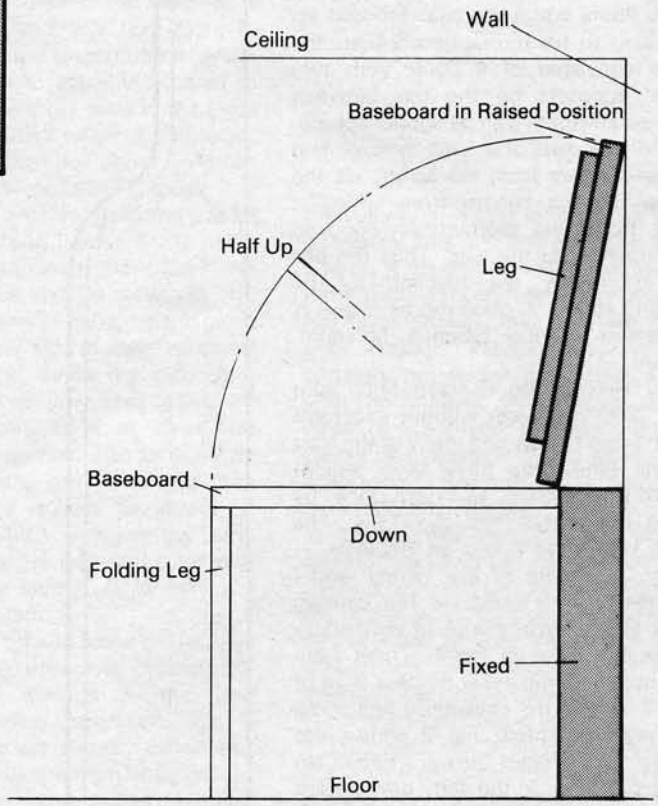

Fig 5