Making a Dome Cover

By A. J. T. EYLES

A few pages ago, we looked at the technique of raising metal to manufacture locomotive domes. Here we see the built-up method used at Swindon. It would need very careful workmanship to use this method on a polished brass dome without the joint being visible. Many domes are, of course, painted (including the GWR) so the joint would not be so critical, but this is no excuse for sloppy work.

THE writer read with much interest the article by "L.B.S.C." entitled "Built-up Boiler Mountings," in the February 6th issue; having had considerable experience in making sheet metal dome covers, he thinks a few further notes may be of interest.

In the article referred to it is stated "A dome, for example, would consist of three pieces, the rounded top, the sides or barrel, and the base." This fabrication method is shown in the sketch on page 108 with serrated joints. While employed in the coppersmith's shop at the Great Western Railway Works, Swindon, a few decades ago it was our practice to make all locomotive dome covers from sheet brass in two pieces with dove-tailed brazed joints as shown in Fig. 1, and, when making model dome covers the two-piece method has always been practised whether made from sheet brass, copper or steel. In the process of making a dovetail, thinned-edge joint, the edges of both pieces of metal are thinned by hammering while it is resting on an iron or steel tool (the edges, of course, can also be thinned by filing), but only one edge is cut, as shown at A in Fig. 2, to form the necessary cramps. Cutting is usually done by a sharp chisel or a knife held at an angle, for fairly large size dome covers, but tinsmith's snips are more suitable for cutting the cramps for most model dome covers. This method of cutting ensures that when the cramps are hammered down there will be no thick edges at their sides, and that the brazed or silver-soldered joint can be made perfectly flush and of the same thickness as the surrounding surfaces. For the joint on the circular body, the cramps are bent up right and left alternately to allow the thinned portion of the other edge to go in as far as possible between them, and so that alternate cramps go on opposite faces of the thinned edge. When the edges are fitted together, the job is usually bound with thin iron wire, twisted tightly, so as to keep this joint securely in position during the brazing operation. The cramps are closed down with a mallet or hammer, over an iron stake or mandrel.

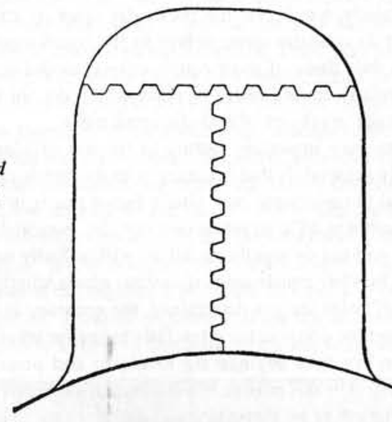

Fig. 1. Dovetail brazed joints on sheet metal dome cover.

In brazing a side joint on a dome cover of fairly large dimensions, care should be taken not to allow the brazing alloy to flow away from the joint. To avoid this, the brazing alloy should be placed solely along the joint. In railroad shop practice the method usually adopted to keep the brazing alloy to the joint, is to bend the dome body "pear-shape." The sharp radius thus made ensures the brazing metal running or flowing along the joint only. To keep the job in position during the brazing operation, it is advisable to fasten the centre portion with sheet metal clips or clamps. After brazing, shape the metal circular form.

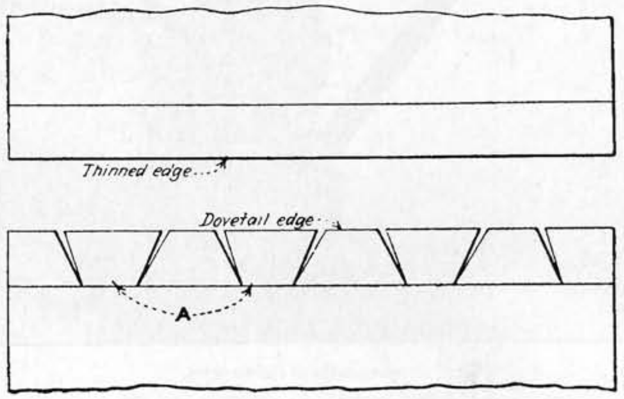

Fig. 2. Method of making a dovetail joint.

With regard to making the convex shape dome cover true a large size dome top is best made with a hollowing hammer in spherical depressions on a hardwood block, but for small size model dome covers, the punch and die method suggested in the article is quite "O.K." In fitting the dome top, the cramps should be well closed down before hammering, as previously indicated. The circular joint should then be brazed, using a low melting point braze metal. Powdered borax may be used as flux, but it is advisable to have it calcined (fused), since calcining prevents it from swelling and frothing, as well as carrying around the brazing metal when the heat is first applied. Calcining may be done by applying a bunsen flame from a blowpipe or blowlamp upon the borax, when it will swell up. It can be rubbed down after it has cooled. Borax treated in this way is much easier to use. An excellent proprietary flux to use in silver-brazing sheet brass dome covers is known as "Tenacity Flux No. 3". After the circular joint has been brazed, carefully clean it up by filing and polishing it, preferably by rotating it in a lathe or other suitable device.

July 3, 1941

Machining Model Locomotive Hornblocks

By Ian Bradley

Here is an article from a very famous name in the Model Engineer's history - Ian Bradley. He was one half of the "Duplex" writing team (the other was Dr. Norman Hallows), but here he was writing under his own name. The device is a slotting attachment for the lathe and from the description and photos looks a most useful addition to the workshop. The photos were taken by another great name Edgar T. Westbury who was the basis for the character in Nevil Shute's "Trustee in the Toolroom."

THE accompanying illustrations show a simple rig which may be adapted to practically any lathe to enable it to be used as a slotting machine for light work. I am purposely not giving any working drawings in this instance, as the rig is so simple that anyone contemplating making the slotter can work out for himself the dimensions for the very few details necessary in its construction. I will, however, run over the components, making any comment that seems desirable.

I should add that Mr. Westbury himself visited me just recently and tried out this set-up on one of the hornblocks for "1831"; he left me with the intention of going home and making up a similar slotter for himself at once.

It should be noted that the rig can be used for forming internal keyways and even for slotting or machining on the angle, so that there are a variety of uses to which the device may be put; moreover, the use of the lathe self-act solves all feed problems (in one direction at least) and the speed of the ram head is, of course, determined by the speed of the lathe headstock.

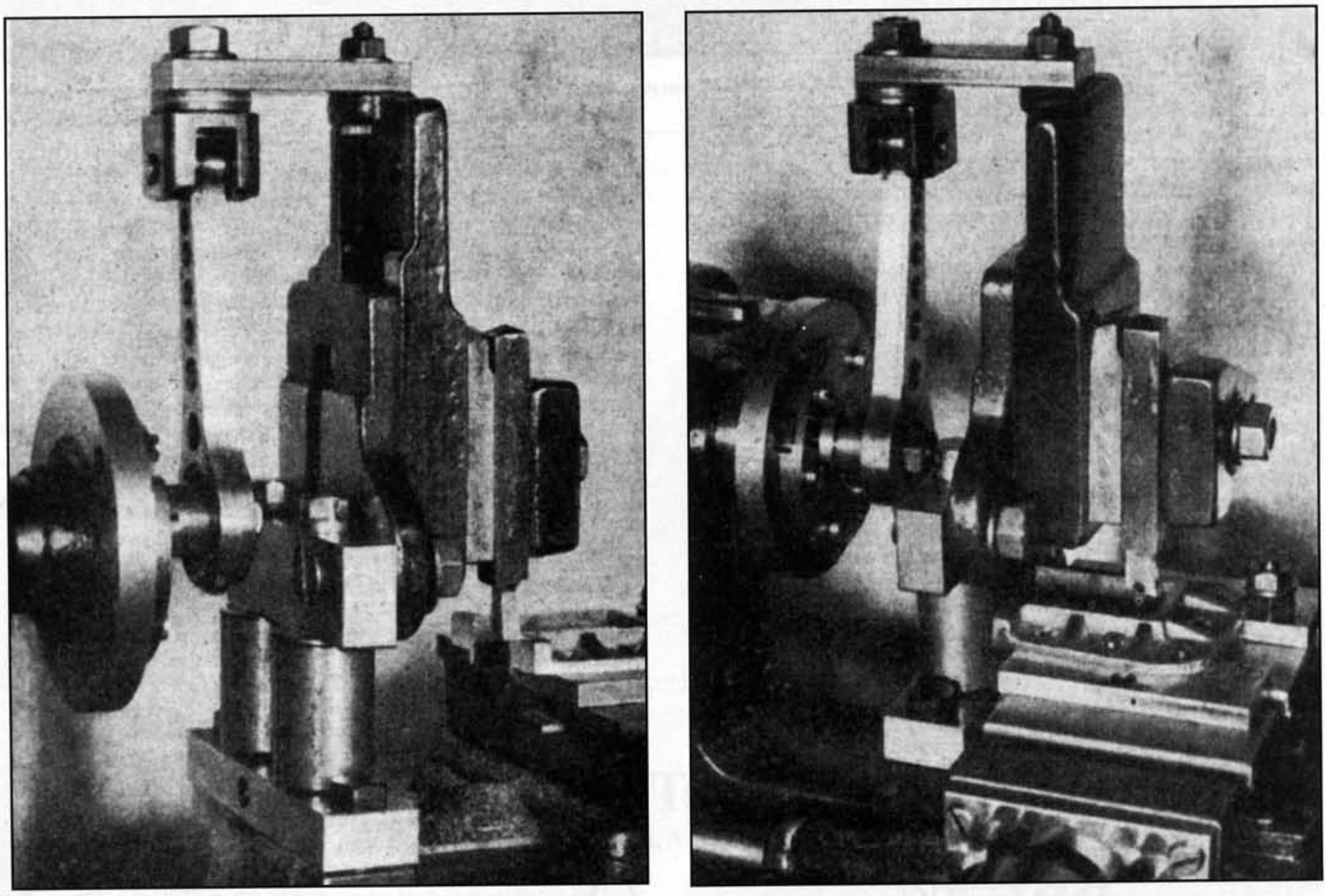

Two views of a rig-up for machining small locomotive hornblocks.

The stroke of the ram is variable, so that the slotter is quickly made adjustable to any work within its compass.

It will be observed that the ram is simply the lathe top slide turned up on one end and mounted on a suitable fixture, which can be clamped to the lathe bed. The ram is driven by a connecting-rod from the lathe driver plate, to which is made fast a pair of semi-circular plates T-slotted to provide a means of quickly locking the big-end pin in any desired position. This arrangement allows the stroke of the ram to be adjusted for travel.

In making up the gear it is important to get the centre line of the connecting-rod and the centre line of the ram as close to each other as possible. Otherwise undue stress will be imposed on the mechanism. As shown, it is capable of 0.020 in. cuts in bronze at 120 strokes per minute, at which speed exceptionally good finish on the work is obtained. If an additional stay is attached to the base of the ram unit so as to tie it back to the lathe headstock, undoubtedly much heavier cuts will be possible and there need then be no fear of a dig in. I shall make this addition in the near future and so increase the scope of the contrivance.

Apart from the standard which clamps to the lathe bed, there was little else

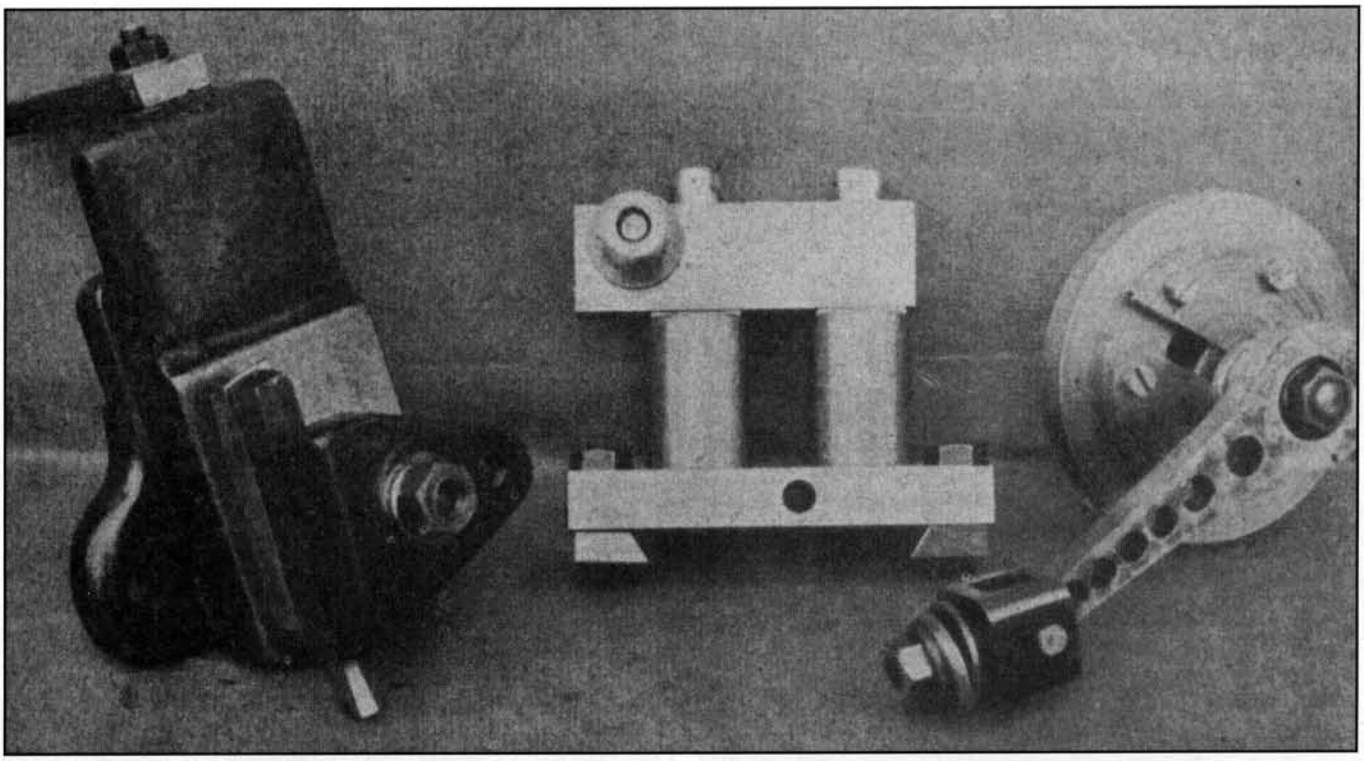

The component parts of the rig.

in the gear which did not come out of the scrap box. The connecting-rod, fitted with a ball-bearing big-end, was made for a pump some twenty years ago. The little-end bronze fork which is attached to the ram link also formed part of the same pump.

If it becomes necessary to make a connecting-rod, quite a light one will do, as all work is done in tension, but bearings should be of ample proportions and be plain ones for preference. As to the semi-circular T-slotted plates, these originally did duty as formers for bearing up the oil well for the "M.E. Road Roller engine.

I think that the arrangement for varying the stroke will be apparent from the photographs; note that the big-end ball-race is clamped to the crank distance-piece by the same bolt which holds the distance-piece against the semi-circular plates. Thus, by slacking off the clamp nut, the distance-piece may be moved along the T-slot and so provide stroke adjustment.

Now as to machining the hornblocks for "1831." A little mass production can usefully be employed here. The first thing to do, after the frame abutment faces have been end-milled to the prescription of Mr. Westbury, leaving all the spigots which engage the frame members exactly the same size, is to jig-drill the castings, using one of the frame members as the jig.

The castings are then screwed down to two parallel strips mounted on the lathe boring table of the lathe, one of the strips having been lined up previously and checked by dial indicator, or, more simply, by traversing the slotter tool so that its parallelism in relation to the strips is assured. The castings will have been screwed to the strips in such a way that their spigots engage with the inner edges of the parallel strips. In this way each casting will be exactly interchangeable for machining and it will be necessary only to check off the first casting to see if the gap being machined is coming out dead central. A note of the cross-slide index settings will ensure that each hornblock is machined precisely the same. If the hornblock spigots have been machined to a dead 1.000 in. then the thickness of the spigots themselves should be dead 0.0625 in. when the gap is finished, thus leaving the width of the latter 0.875 in. If the spigot measurement is greater than 1.000 in., half the amount of the increase must be added to or if less than 1.000 in., be subtracted from, the finished spigot thickness to achieve the desired result, viz. a gap measurement of 0.875 in.

The keep-plate faces of the hornblocks may all be machined at one setting of the lead screw index, the slotting tool being turned through 90 deg. for the purpose.

August 21, 1941

Notes on SQUARE HOLE DRIFTS

By G. G.

A correspondent asks: "What is the correct way of making drifts for square holes?" and the point he is uncertain about is the correct method of forming the milling edges, or "saw edges," as he describes them. The following notes not only describe the form and arrangement of the edges, but give some hints on how to cut them.

In many models there is a need to provide square holes usually of small size. Commercial broaches are difficult to come by and are expensive. Here we have an article which many readers will find useful.

A SQUARE hole drift is really a form of milling tool which can be defined as a square reamer because, like a reamer, it should only be used to open out and correct for parallel an undersize square hole, which it must just enter. The accompanying sketches numbered 1 to 4 will explain the correct form. The cutting edges are straight and slope up, as in sketch 1, from 1 to 2, the start of which at 1 being level with the finish of the edge below, makes the pitch of the edges, at the corners, the same as the vertical rise from 1 to 2. U is the unit width and corresponds to the size of the finished hole across the flats, and the pitch is given as ⅜U, which then is the tangent of the angle of rise, which comes out as 20 deg. 33 min., or nearly enough 20½ deg. The important point in the construction is that any one edge must continue constantly round all sides, to give strength at the corners.

For instance, the edge 1 to 2 (in sketch 1) follows on at the right-hand face as 2 to 3. Then on the opposite side, shown dotted, from 3 to 4, and on the left-hand side face from 4 to 5. This is better shown on the diagonal view (No. 2) to the right, which is looking on the right-hand corner of No. 1. In this the face *A* corresponds to *A* in the sketch No. 1 and *B* is the right-hand side face of No. 1. *C* is the opposite side in No. 1 and *D* is the left-hand face of the other view, both, in this case, on the other side. It is here seen that the distance 1 to 5 along the same vertical corner corresponds to the "lead," regarding it as a multiple thread made up of four pitches, and resembles a four-start screw. The other square spirals are indicated by dotted lines in No. 2. No. 3 shows, by shading, how the edges are backed off by milling, and raked on the underside, and No. 4 is a double scale outline of a cutting edge. This is produced by an angular milling cutter of 60 deg. angle (face to periphery) applied at an angle of 75 deg. to the drift axis and of a peripheral width of, at least, ½U.

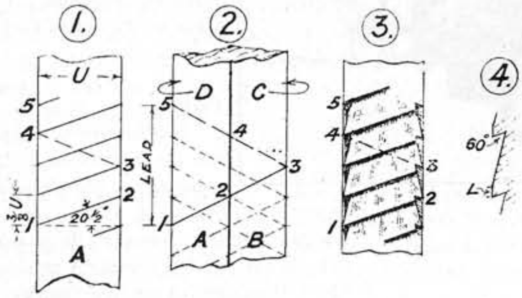

Sketches explaining the correct form of a square hole drift.

Method of Milling

This is done by milling obliquely across and is best carried out on a universal milling machine in which the top longitudinal table, normally used square with the milling spindle and parallel with its slide, can be angled either way from that position independently of its slide, which remains square. The drift blank is set up on that table in cross alignment with it and, with such end and side stops that it can be changed in setting with all four faces upward without alteration of position, end or sideways. In addition to this, the point end of the drift blank is set elevated to an angle of 15 deg. to the table surface, to admit of bringing the plane of the angular cutter at 75 deg. to the drift axis. The table is then angled 20½ deg. to its normal square position, either way, because it doesn't matter which hand the slope up of the cutting edges take. The vertical face of the cutter on spindle must, of course be set facing towards the shank of the draft and away from the point end of it.

In a case where either the machine table can only be swivelled with its slide, or both are fixed square to the cutter spindle and cannot be angled, it will be necessary to set up the work across the table, but angled 20½ deg. to its square cross line, by means of a bevel square accurately set, to 69½ deg. and with its stock working off the table side edge. Then the longitudinal traverse, being in line with the cutter will traverse the drift under it at an angle of 20½ deg. to a cross line of it and 69½ deg. to its side.

Having traversed to an edge position over the drift by the machine slide in line with the cutter spindle, raise the work by its vertical traverse till the cutter just touches. It is from this position of the vertical traverse screw, that the depth of the cut is measured either by a micrometer on this screw or by counting turns and fractions of turns. Each cross cut must be the same depth, but will not, of course, be in the same position vertically, because the job is sloping upward.

Dividing

The dividing for spacing is done by the micrometer on the in-feed (the one in line with the cutter spindle). Its distance measured on the corner edge of the drift for ½ in. square with slope of 20 deg. 33 min. is 0.1875 in., but if we slope the groove 20½ deg. it becomes 0.187 in. As we traverse across the sloping lines at 90 deg. to them the traverse per pitch is less than 0.187 by the difference between the base and hypotenuse of a right-angle triangle of 20½ deg. (i.e. the difference or ratio between the sine and tangent of that angle). This brings the pitch to 0.175 in. But we are also sloping up to 15 deg. to the horizontal and this distance computed the sine and tangent ratio for 15 deg. is reduced to 0.170 in. or 170 "thou." which is the divided distance of the traverse between each cut. So long as the job is not shifted end or sideways when offering a fresh face, each reading of the micrometer will tally with an edge when working on any of the four faces.

Under-raked Edges

It will be noticed that each edge is under-raked at 15 deg. and therefore nicks the cutting edges at one spot on each face, as seen exaggerated on the right-hand of sketch No. 3. If the edge be shaped as in No. 3, the corner cut, in each case would leave a fillet. A "land marked" L in No. 4, is provided of such width that it embraces this nick and to an extent this practically obviates the leaving of a marked fillet on one side of each corner.

In referring to the inaccuracy arising on one side of the corners of a square hole due to the nicking of the edge by the under raking of the adjacent cutting edge following the upper end of the sloping edge, the addition of a land to the cutting edge only partially corrects the error, because the land itself has to be relieved. Should the fillet left on one side of the corners really modify a good fit of a square plug, it can be done away with entirely by driving the same drift through the "through" hole from the opposite side. If this be not possible, and one can only drive one way, use a second drift, the slope up of which is cut on the other hand.

In some complicated shape drifts the writer has seen, to avoid this error at corners, the edges were cut straight across. These, however, were machine operated.

When the drift is finished as to machining, and hardened, the lands on every edge are clearanced by a relief of about 1 deg. by fine grinding, and the width of these lands, which may be about one-sixth of the pitch or less, if possible, governs the depth of cut of each and all grooves, which must be the same, as previously stated.

Machine-made Drifts

These notes refer more especially to machine-made drifts, such as are used to form square holes by machine operation as well as hammer-operated drifts. Many toolmakers make their own drifts, when one is needed quickly for small holes and the size does not happen to be in the tool stores. These are generally filed up by hand, and, to be of any use, require some little skill in the making.

August 28, 1941

A Rotary Milling Table for the Lathe

By C. C. Allison, A.R.C.A. (Lond.)

MY EFFORTS in model engineering seem to go along in the intermittent periods marked by breaks due to the lack of the right kind of tool to do the work in hand. Some tools, of course, I buy, or did do before the present war, but many I make to reduce the expense or because I have been unable to obtain a suitable tool through the trade. I always feel, however, that the making of machine tools, not to mention pattern making, is a first-class training for good modelling.

The rotary milling table here described is one of my more recent breaks, having left modelling at a point where I needed some curved links for a locomotive valve-gear. I know there are ways of making links without a table, but there are so many things in addition, spherical turning, for instance, which can be accomplished once the table is produced.

Over the years there have been many rotary tables described in Model Engineer. This one by Mr. Allison seems to be one of the best. Bear in mind that this was 1941 when wartime restrictions meant that commercial items were only available for war work and, as a result, you had any material you could get.

The dimensions of the milling table were fixed by what I could machine myself on a 3½-in. Drummond in good soft cast-iron, the idea being to reduce height as much as possible. Readers who have a lighter lathe than mine, and who still wish to make the table, might possibly get the base machined by a friend on a heavier lathe or alternatively, scale down the drawing. A table of 3½ in. or 4 in. diameter would still be mighty useful. It will be noticed from the drawing that provision is made for moving the worm out of action by means of eccentric bearings to the worm spindle. The' worm runs in an oil bath, and may be locked in or out of gear by the side screws; provision is made for bolting the base by countersunk screws through the centre of the base, in addition to the provision of side lugs for the same purpose. The worm thrust is taken squarely at both ends on to the eccentric bushes. The worm is 8 t.p.i. Acme single-start thread, the largest pitch conveniently obtainable on my lathe, and the wheel was marked out without an index, by applying some low cunning learnt from back numbers of THE MODEL ENGINEER. I also took note of the method of construction of two first-class commercial tables described on page 423, May 4th, 1933, issue of THE MODEL ENGINEER. In fairness I ought to point out that a two or three-start worm would make a more durable job if any reader contemplates making the table for rather heavy jobs. The centre spindle on which the table revolves is a force fit in the latter and running fit in the base. The ¼-in. centre is spring loaded and may be depressed when not required. The third screw on the side of the base is to lock the wheel.

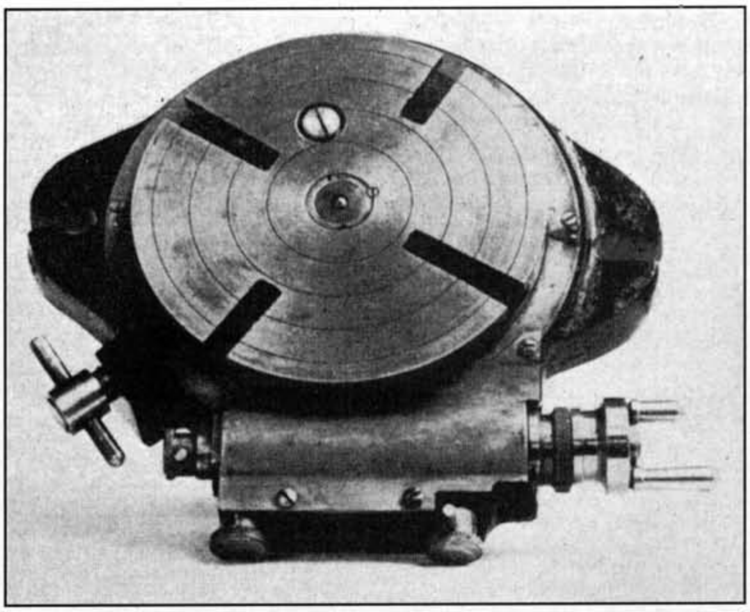

The Finished Table.

Patterns

Two patterns are required and one core box for the T slots. The patterns may be built up from ply or turned from the solid. In my case, I had one face ground-off the castings by the foundry. Here I should like to acknowledge my indebtedness to Mr. R. Woodcock, of our local foundry, who has taught me a lot about pattern making. It pays to

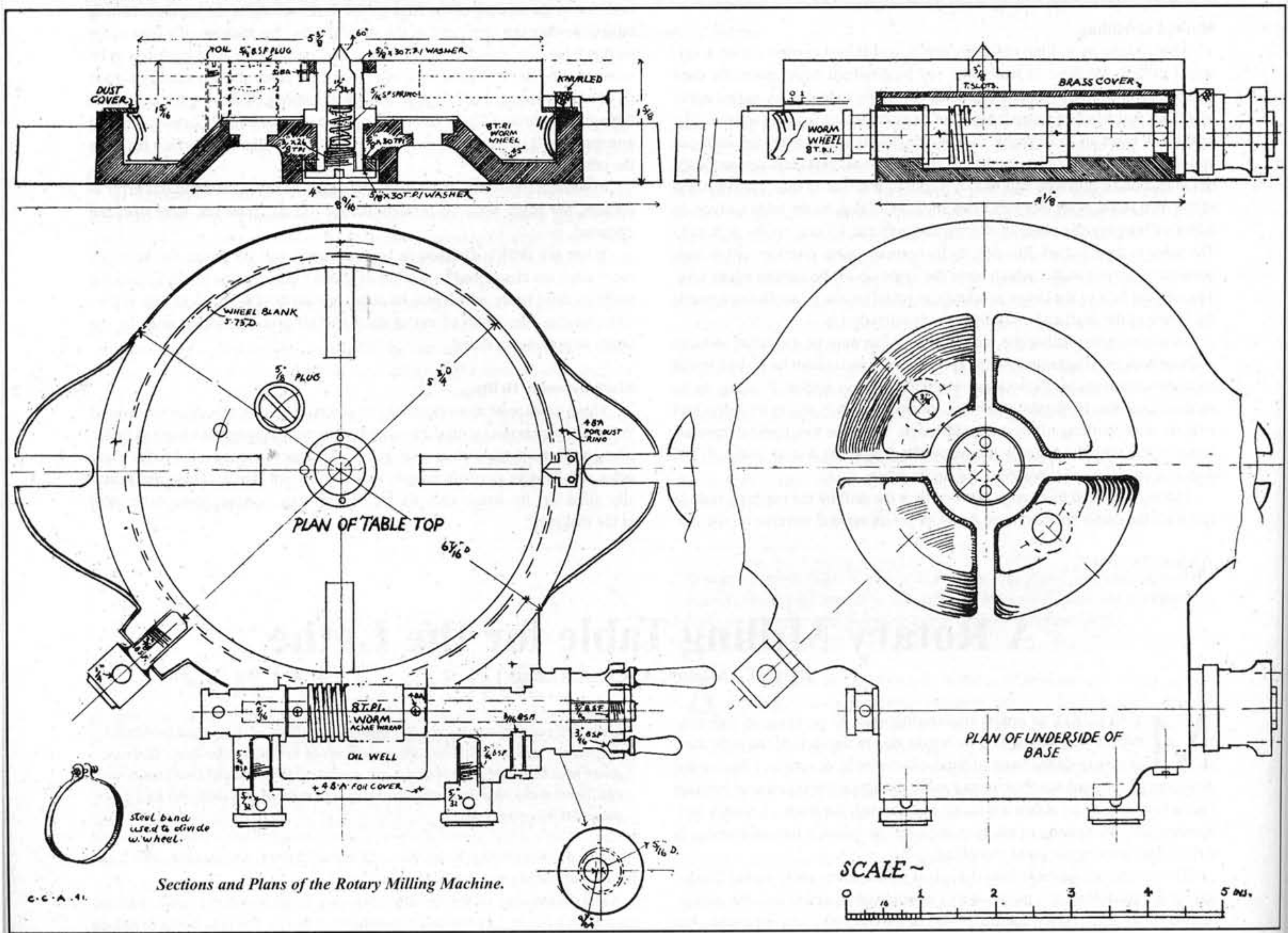

Sections and Plans of the Rotary Milling Machine.

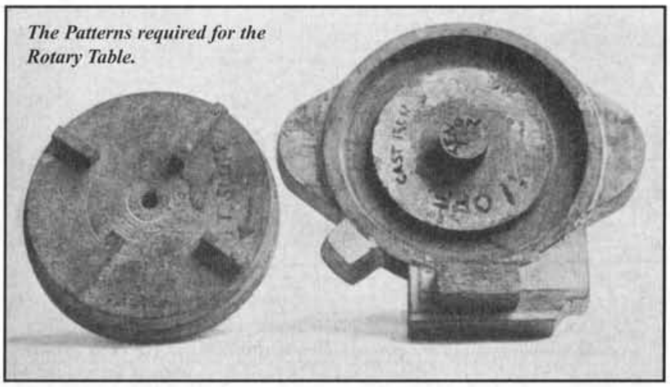
The Patterns required for the Rotary Table.

pickle the castings in sulphuric acid and/or file them before machining.

Machining allowances should be made in turning the patterns to size from the drawings and leave plenty of rake on the thicknesses in order that the patterns will draw. The stub centres, one of which is visible in the photograph of the patterns, are chucking tenons.

Construction

The first job is to machine the base, as this is to be used later as a support to hob the wheel. Next, the top is turned and made an accurate fit on the mating annular taper of the base. I used marking blue to finish these surfaces. The projection on which these wheel teeth are to be formed should clean up to 5.75 in. dia.

The centre hollow spindle was made and screwed to 30 t.p.i., also a dummy spindle or flat-headed bolt to use when cutting the wheel later. At this stage the various screws were also made, all except three set-screws from a motor-car back axle. This chrome steel will stand up to long service and plenty of punishment.

Worm and Wheel

The worm and hob are made together on one length of chrome steel and case-hardened. The 5-in. hole through the worm should be put through after the screw cutting has been done and before the hob is removed from the lathe, using a fixed steady.

The hob is then fluted and both worm and hob case-hardened together.

The circumference of the wheel has to be divided into 144 eighths and, failing suitable change-wheels, or dividing-head, the following method was adopted. Twenty inches of this steel banding was procured, of the type used to seal ordinary packing cases. Using a try square and steel rule the banding was fixed to the edge of a table and the eighths marked off for just over 18 in., say 18½ in. The two ends of the band are drilled and fitted with a small bolt to form a collar round the worm wheel. The marks were transferred one edge at a time to the wheel using a hacksaw and making an allowance for the slope of the teeth. The band was removed and the teeth sawn across to a depth of just under ⅛ in. with a thick saw of the type used for slotting purposes. The wheel was then fixed upside down on the base of the table by means of the dummy spindle already prepared and the lot bolted down on the saddle, the centre of the wheel thickness at lathe centre height and the hob brought up to mesh with the partly-formed teeth. I found the wheel commenced to revolve right away, but had to be helped round in two places by hand for the first two revolutions. After this, the hob gashed the teeth without trouble and the slow motion of the turntable was rather fascinating to watch. It is essential, however, to see that everything is rigid and that there is no shake up or down on the table. As soon as the teeth have been formed sufficiently to cause the worm to revolve freely, the worm wheel was taken down, centred on the faceplate, and the edge of the wheel machined concave to fit the ¾-in. worm. The job was then replaced as before on the saddle and the teeth cut full depth without trouble. It would be much quicker for those who wish to make an easier job of the wheel to have a bronze ring cast and fixed in place of the projection on the base of the table. This would involve a slight alteration to the pattern, but the teeth would be more easily formed. Another point is that a 1-in. Whitworth tap happens to be 8 t.p.i., and this could be used for those who have one or could borrow one, in place of the hob to correct any minor discrepancies of tooth spacing during the first stage of thetooth forming.

Having finished the worm and the wheel, the rest is simple, and the various details, such as the cover for the worm wheel and worm, are largely a matter of choice. I used motor-car windscreen brass softened and bent into a ring for the wheel cover and split, and opened out with ends soft-soldered for the worm housing. Car spoke wire was used for the worm grub-screws and silver-steel (car push-rod) for the set-screw, to the worm spindle bush at the knob end. The eccentric bushes are of chrome steel case-hardened and the 5⁄16-in. hole through them is 9⁄64 in. off centre. I spoilt the first pair of bushes for the worm spindle, as they would not line up without binding on the spindle when in position. The second time I finished the larger bush to size, and the tail bush was left to size externally, but with the 5⁄16-in. spindle orifice 1⁄64 in. undersize. The two bushes were then lined up with a dummy spindle in position and a 5⁄16-in. D-bit put through both holes with a breast drill. The bushes were turned to a running fit in the housing holes and packed 1⁄16 in. out of centre in the s.c. chuck, for the 5⁄16-in. spindle hole. Indexing the table was done by change-wheels - twelve divisions, and two holes drilled through, a small one for oil (not shown in the photograph of the finished table), and a large one as a stopper against swarf over the bolt holes. The operating knob does not look so well as a ball handle, but more serviceable in this case, as it does not project below the base of the table. It should be noted that the screw at the base of the centre hollow spindle serves two purposes, it keeps the centre spring in place and prevents the screw washer above it from unscrewing.

October 2, 1941

A Useful Milling Cutter

A CHEAP and very useful milling cutter can be made from the outer member of a discarded ball or roller-bearing. First, it must be annealed as thoroughly as possible (it will still be pretty hard, in my experience) and is then mounted in the 3-jaw chuck and the inner surface trued up. A 3⁄32 in. hole is drilled about 3⁄16 in. from one edge, to take a small rivet which is put in from the inner side and the head left projecting inwards, the outer end being finished off flush. It is then mounted on the "drill" jaws of the 3-jaw, being gripped by the jaws expanding, with the stop just provided bearing against No. 1 jaw, providing a positive drive without excessive tightening of the chucks and at the same time ensuring that cutter will always run true if the stop is always replaced beside No. 1 jaw. The job is then trued up, the radial surface being turned down until the slight rounding of the corner usually found is removed. Teeth are then marked off, mine is 2¼ in. diam. and has 28 teeth, giving about ¼ in. pitch. I had a scriber set about ¼ in. above centre when marking-off the teeth, which gives a sliding action to the cut and produces a very smooth finish on work done. Teeth are then cut, with file and hacksaw, if no other means are available - teeth of the pitch mentioned being about 3⁄32 in. in depth. When shaping the teeth I left a small flat, about 1⁄32 in. in width as shown enlarged at *A* in sketch, which was later backed off slightly as shown at *B*. This gives a stronger tooth point and reduces the risk of getting the teeth uneven in height. The cutter is then hardened and tempered and is ready for use except that I found it desirable to grind a very slight relief at the back of each tooth on the cylindrical surface, which I have tried to show by the shading in sketch. Its uses are many, and include facing ends of work that has been bored by boring bar, saving many resettings of the tool if this is done by boring bar. Driven at high speed, it produces a very good finish on wood any way of the grain, and I have found it very useful to produce a true flat on a wooden cylinder in pattern making (not easily done with a plane) in cases where an "excrescence" has to be attached to a cylindrical pattern. Mitre joints of any angle can also be trued up accurately, simply by bolting a light angle-iron "fence" to top slide and setting at the appropriate angle, holding the work against the fence by hand and traversing the whole past the cutter. - K. J. ROBINSON.

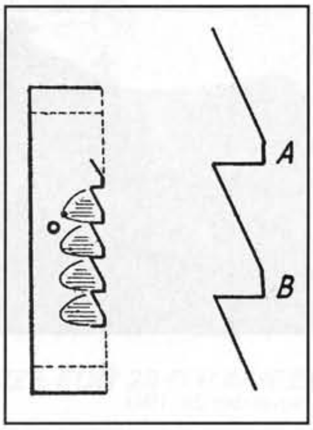

October 23, 1941

A Chuck Holder for the Shaping Machine

By C. J. Fisher

It is often advantageous to be able to transfer work from lathe to milling machine, drill or shaper without disturbing the part. Here is such a gadget for the shaper. If you went a bit further and divided the chuck back plate and incorporated a detent you could machine items such as model traction engine hubs with the greatest of ease.

FOLLOWING the machining of a part in the chuck, it frequently occurs that a portion has to be rendered square, hexagonal, or possibly requires further attention, such as the cutting of a slot, etc. Where a milling attachment, with the necessary drive, is available, the work is easily carried out without removing the part from the chuck, but when it is necessary to re-set the item to be machined in the shaping machine vice or clamp to the machine table, possibility of error in alignment creeps in, apart from the wastage of time involved.

To overcome this trouble, the special bracket shown in the photograph was made to clamp to the vertical face of the shaping machine and to hold either the four-jaw independent or the three-jaw self-centring chucks as desired. For the bracket, a short length of steel girder was obtained, and after squaring up the ends, was secured to an angle-plate on the face-plate, and one outside face trued up. The bracket was then reversed and the other outside face machined, and, at the same time, the hole to receive the bosses of the chucks was bored out. The chuck back-plate bosses had previously both been turned to exactly the same outside diameter.

To hold the chucks securely in the bracket, this is split from the bore and a hole drilled through the web to take a long bolt to contract the bracket on to the chuck boss. In addition, a special clamping screw, threaded the same as the lathe mandrel, was made, and also a strong clamping plate. These parts are clearly shown in the photograph of the separate pieces, the clamp and screw being fitted from the underneath, holding the chuck firmly to the bracket. The screw is drilled throughout, the same size as the hollow lathe mandrel and has four holes in the head to take a tommy bar, although the head could, if desired, be square or hexagonal to take a spanner.

To assist in machining operations, the rims of both chuck back-plates have been carefully divided, a clear line being scribed every 6 deg.; also, a line scribed on the upper face of the bracket, so that it is a simple matter, after slacking off the clamping bolt, and the bolt passing through the bracket, to rotate the chuck any desired amount, such as for shaping a square, hexagon, etc.

The bracket is secured to the shaper by two Tee-headed bolts, and has a long key let in the back face, which engages with the keyway in the machine, exactly as on the table which has to be removed when the device is in use.

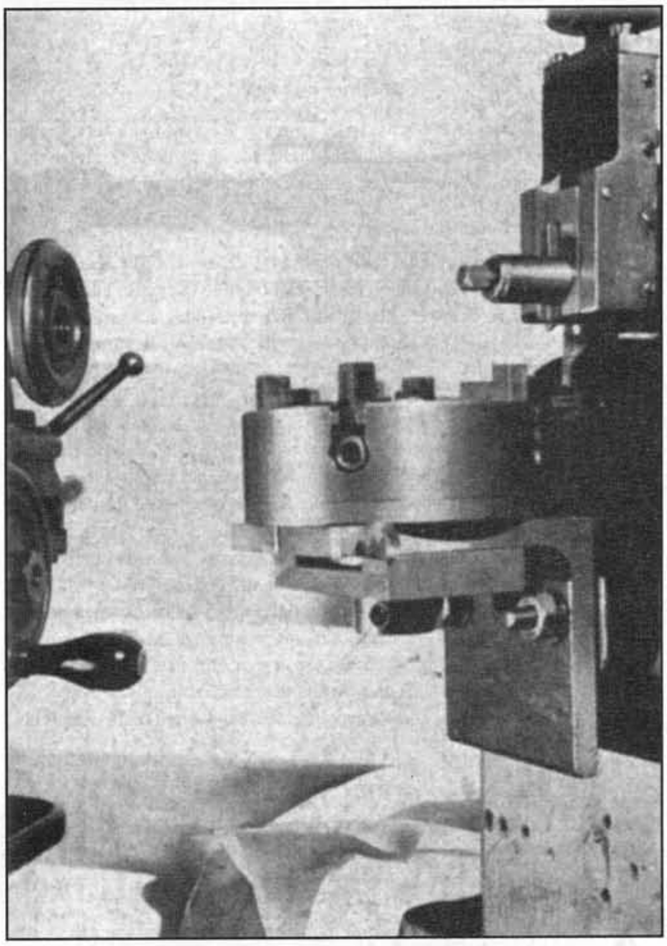

Above: The chuck holder in use.

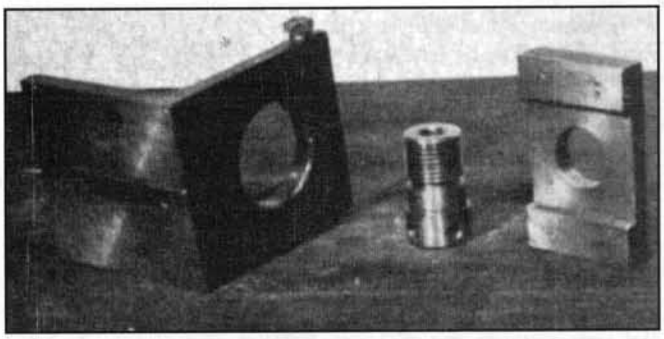

Left: Parts of the chuck holder.

November 20, 1941

Dividing with Standard Change-wheels

By T. P. Stuchfield

THE drawings reproduced herewith show an apparatus for dividing division plates, etc., by using standard lathe change-wheels (with three additional pinions having 19, 23 and 24 teeth) arranged in such a manner as to give a differential or epicyclic drive.

It consists of a baseplate (1) fitted with a vertical column pin (2) about the lower end of which revolves the slotted main arm (3); this arm carries a pin (5) adjustable along its length, which pin forms the spindle for the two planet pinions Ps and Pr gearing respectively with the fixed sun wheel S secured to the column (2) and with the driven wheel R, which is free on this column.

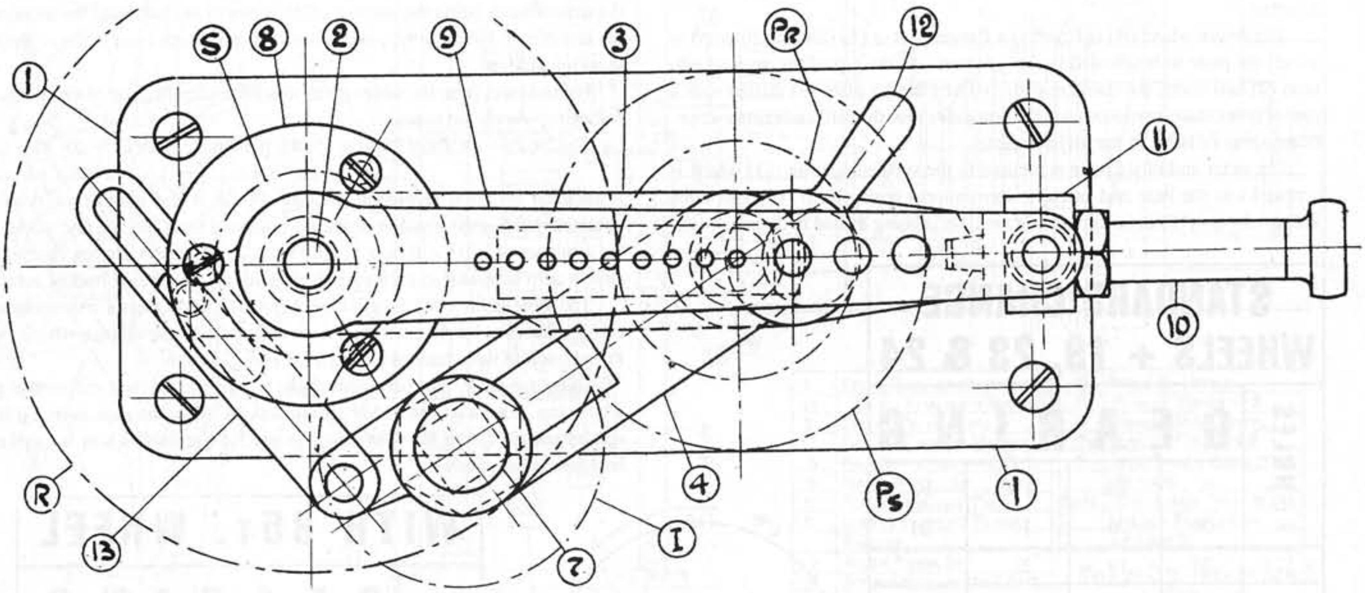

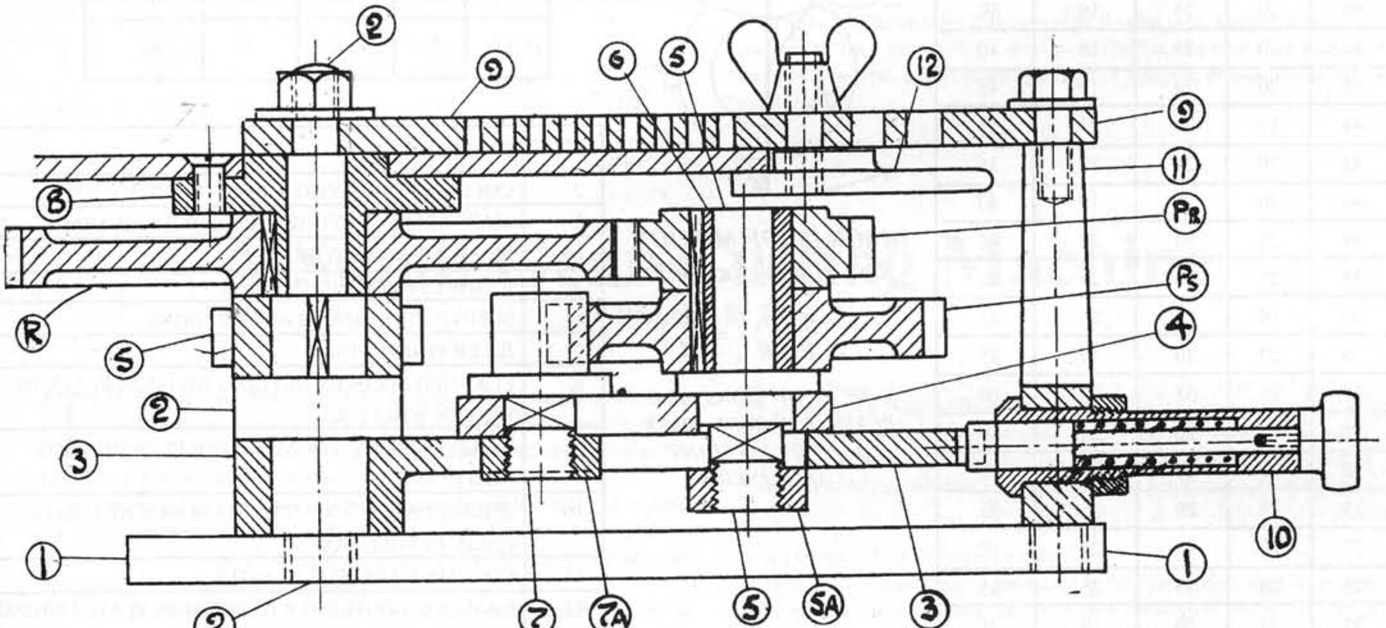

FULL SIZE FOR 20 D.P.WHEELS

As the sum of the number of teeth in S and Ps is always less than the sum of the number of teeth in PR and R, an idle wheel (I) is provided to couple S and Ps together; this idle wheel runs on a pin (7) adjustable along a slotted arm (4) which itself is carried along arm (3) when the pin (S) (about which it pivots) is moved to bring PR and R into mesh.

When the gears and arms are positioned, the set-screw through the slotted security link (13) is tightened up, thus locking the arms (3) and (4) rigidly together.

The driven wheel (R) is keyed to a flanged sleeve (8) (four on column) to which the plate to be divided is also secured. At the top of the vertical column (2) and above the division plate is fixed the jig plate (9) drilled with a row of holes (case-hardened) which form guides for the drill and ensure a concentric ring of holes in the division plate.

The outer end of jig plate is secured to the vertical column (11) which is screwed into the base and carries a conventional spring latch (10); this latch secures the arm (3) in position while the hole is being drilled in division plate.

To hold the division plate securely to the jig plate during drilling only, the clamp (12) is tightened.

With this arrangement of epicyclic gearing, each revolution of the arm (3) gives wheel (R) (and with it the division plates

$$1 + \frac{S \times P_R}{P_S \times R}$$ revolutions, which is reduced by cancelling etc., to $1\frac{N}{D}$

the denominator being the number of divisions in the plate and the numerator the number of divisions the plate overruns from the division made at the previous revolution.

For instance, from the tables given, it will be seen that for 26 divisions, the following wheels are required:-

S = 20, Ps = 40, PR = 25, R = 65, the plate then makes $1 + \frac{20=25}{40 \times 65} = 1\frac{5}{26}$ revolutions for each revolution of arm (3). 26 is the number of divisions obtained and 5 is the position of the next division from the last one made, and the sequence of holes will be 0, 5, 10, 15, 20, 25, the last being one short of the first or zero hole, and so on for 25 revolutions, the 26th being back at zero.

The table gives a series of 30 holes from 19 to 60 (less a few unessential blanks) that may be obtained from a set of standard lathe change-wheels, with the addition of three pinions having 19, 21 and 24 teeth.

Of course, many more divisions above 60 may be obtained and another pinion having 21 teeth will prove very useful indeed, as will be seen on trying other combinations of wheels. Obviously, in mechanism of this sort no shake or backlash is permissible.

STANDARD CHANGE WHEELS + 19, 23 & 24

HOLES	GEARING			
	S	Ps	PR	R
60	20	20	19	60
57	20	19	23	60
56	19	35	25	40
55	20	20	19	55
54	20	24	19	45
52	19	20	25	65
50	20	20	19	50
48	20	24	19	40
46	20	23	19	40
45	20	20	19	45
44	19	20	25	55
42	20	24	19	35
40	20	20	19	40
39	20	60	20	65
38	20	19	23	40
36	19	20	25	45
35	20	20	19	35
33	20	55	25	60
32	19	20	25	40
30	20	20	19	30
28	19	20	25	35
27	20	45	25	60
26	20	40	25	65
25	20	20	19	25
24	20	40	25	60
23	20	20	19	23
22	20	40	25	55
21	20	35	20	60
20	20	40	35	50
19	20	19	23	20

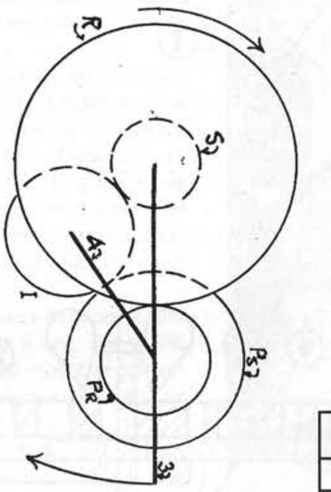

DIAGRAM OF MOTION
Revs of R to | Rev. of 3.

$$= | + \frac{S \times P_N}{P_S \times R} = | \frac{N}{D}$$

N=N^{o} OF DIVSIONS THAT PLATE OVERRUNS ARM 3
D= N^{o} OF DIVSIONS OBTAINED

This is an interesting item designed to divide division plates, but with the usual model engineers' ingenuity it could easily be adapted for use on the milling machine. It would be an interesting item for the tool section at the Model Engineer Exhibition.

WITH 85T. WHEEL

HOLES	GEARING			
	S	Ps	PR	R
51	20	60	25	85
34	20	40	25	85
17	20	20	25	85

1	BASEPLATE.
2	COLUMN PIN. CENTRE OF MOTION.
3	MAIN ARM CARRYING PIN 5 AND IDLER ARM 4
4	IDLER ARM CARRYING PIN 7.
5	PLANET PINIONS PIN.
6	SLEEVE COUPLING PLANET PINIONS.
7	IDLER PINION PIN.
8	FLANGED SLEEVE COUPLING DIVISION PLATE TO DRIVEN WHEEL R.
9	FIXED JIG PLATE LOCATING HOLES IN DIVISION PLATE.
10	SPRING LATCH LOCATING MAIN ARM AT END OF EACH REVOLUTION.
11	COLUMN CARRYING 10 AND 9.
12	CAM CLIP COUPLING 9 TO DIVISION PLATE DURING DRILLING.
13	SECURITY LINK FOR ARMS 3 & 4.
NOTE	HOLES TO BE DRILLED AT END OF EACH REVOLUTION OF ARM 3.
S	FIXED SUN WHEEL.
Ps	PLANET PINION TO S.
R	DRIVEN RING WHEEL.
PR	PLANET PINION TO R.

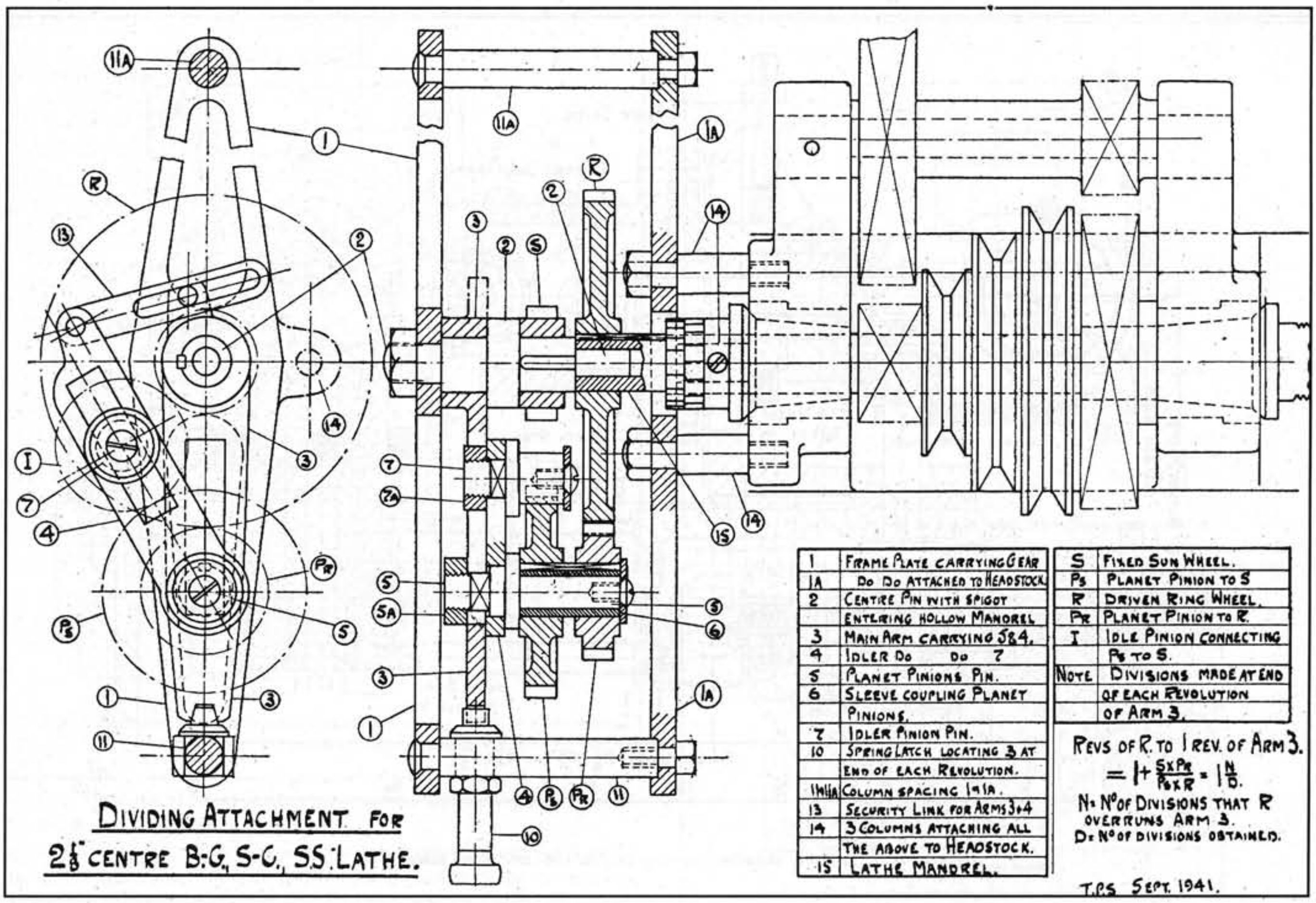

The two following sets of gear give two additional sets of divisions:-

Divisions	S	Ps	PR	R
360	19	24	21	45
400	19	20	21	60

The first of these is for making a plate divided in to degrees, and the second can be used for making a short plate divided into tenths for forming a vernier to the first, and so enabling a tenth of a degree, or 6-minute divisions to be read off.

June 11, 1942

A Small Gear-Cutting Machine

Designed by T.P.S.

For our clock making brethren gear cutting is an essential part of the hobby. Here we have a small gear cutting machine ideal for the clock enthusiast. I am sure that this machine would create a great deal of interest at any exhibition, especially if it was being demonstrated.

THE reproduced drawings show a design for a small gear-cutting machine having the necessary motions required in making gear wheels with straight teeth and worm wheels, and capable of using involute cutters for the first and hob cutters for both types.

In the second case, it should be noted that only one hob cutter is required for each pitch (normal), irrespective of the number of teeth to be cut and that no tooth-by-tooth hand dividing is necessary as the blank is driven at a rate corresponding to the number of teeth required.

The hob cutter is also of a much simpler form than the involute, as the teeth are in a straight-sided rack form without any involved curves.

Drive

All the motions, driving the cutter revolving the blank, and feeding the cutter across the blank originate from the splined first motion shaft.

This shaft is driven from a frame (not shown on drawing) having three stepped pulleys and backgear similar to the head-stock of a lathe but with a smaller difference between the speeds, 25 per cent increase in each step (1.95 to 1 backgear) is suggested, providing 150, 187, 235, 290, 365, and 450 revolutions per minute to the cutter, corresponding to 40, 50, 60, 75, 95 and 120 ft. per minute of a 1 in. diameter cutter.

The shaft of this frame is connected to the first motion shaft by an internally splined coupling which can be moved endways to enable the change-wheel to be altered through a small gap then exposed between these shafts.

Cutter Box

The cutters are mounted on a short arbor having a square at one end, which square fits in a square socket in the hollow shaft running in the capped bearings of the cutter box.

The cutter box has a stem passing through a long boss extending backwards from the vertical slide and is capable of being rotated and locked at any angle from the horizontal in order to give the necessary inclination to the hob cutter to suit straight and possibly spiral-toothed wheels.

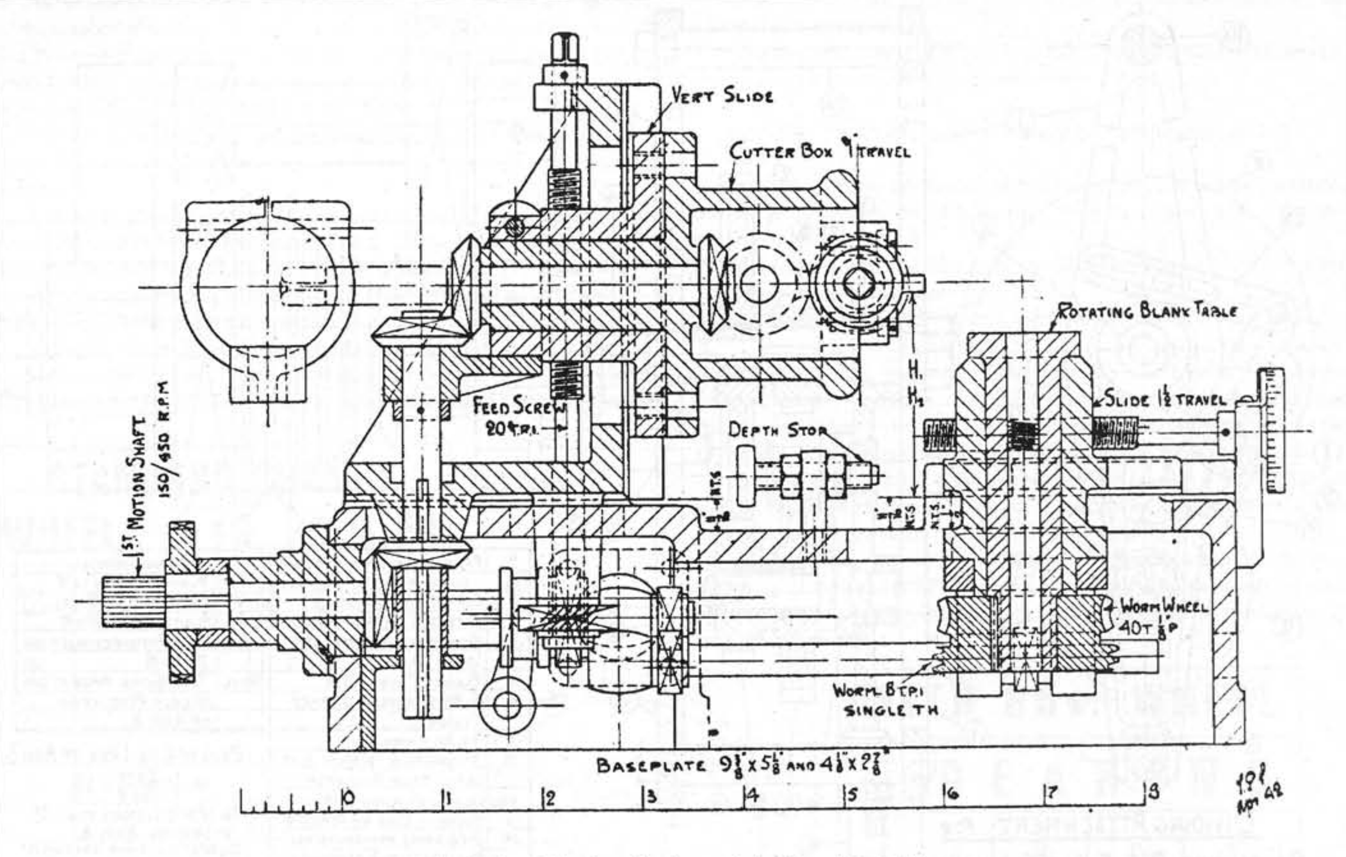

Fig. 1. Sectional elevation, showing vertical slide and blank table.

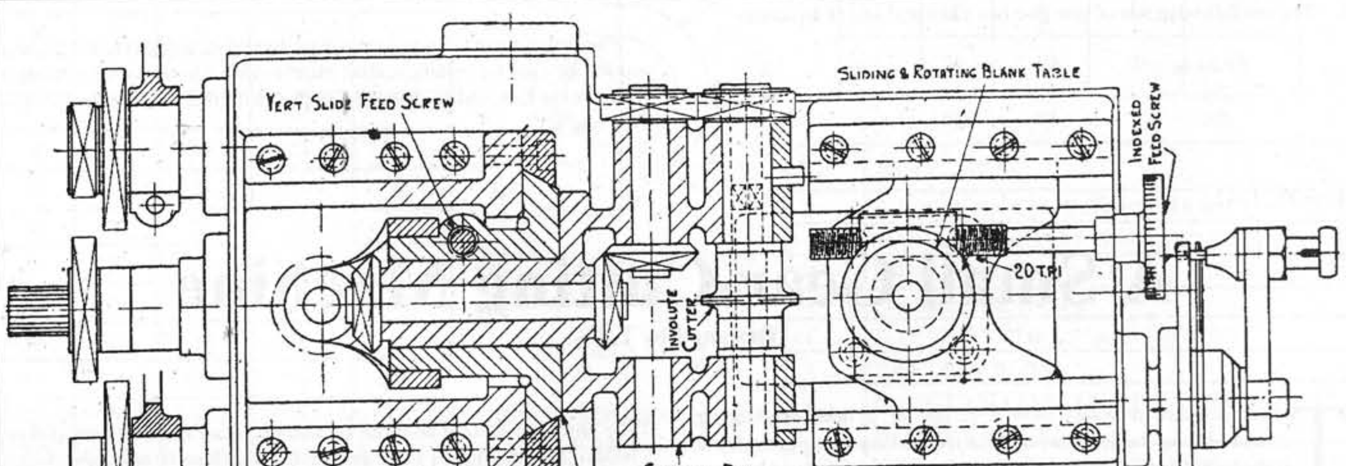

Fig. 2. Plan with angle-bracket, slide and cutter box in section.

This angle is best set by the sine bar method as indicated on Fig. 3; θ is the angle required for straight teeth.

Feed

The vertical slide and cutter box are carried by the angle-bracket bolted to the baseplate and are given a vertical movement of 1 in. by the feed screw; this feed screw is operated by hand when an involute cutter is being used and by the worm-driven feed shafts and change-wheels when a hob cutter is being used.

With a 3:1 ratio of change-wheels a feed of 0.01 in. per revolution of blank, and with a 1:3 ratio a feed of 0.001 in. per revolution are obtained, with, of course, other rates of feed intermediate between these limits with other ratios.

Blank Table

At the opposite end of the baseplate is the sliding and rotating blank table

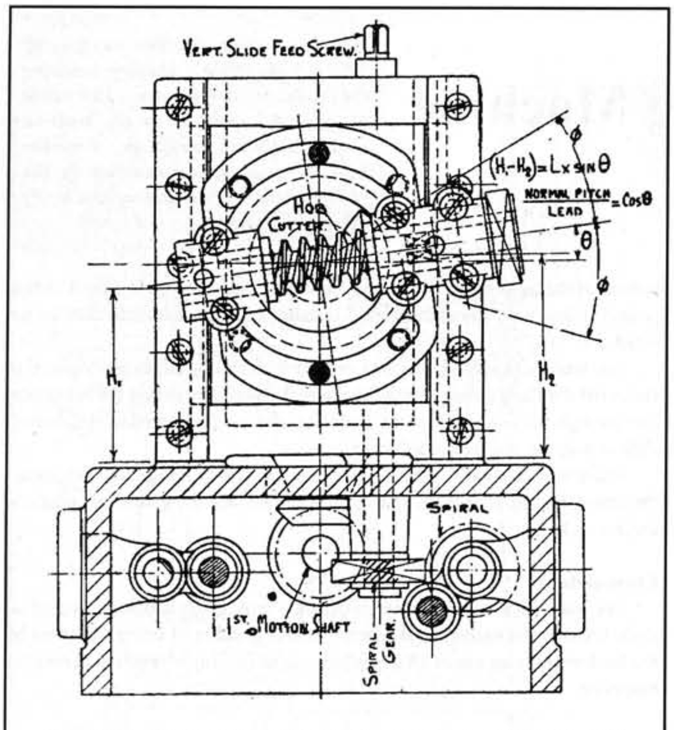

Fig. 3. End view of angle-bracket and slide, showing cutter box and hob inclined for cutting straight teeth,

to which the blank to be cut is secured by a centre bolt with suitable washers for height and bushes for bore of blank.

This table is adjustable for position to suit diameter of blank and can be fed in for light cuts (if desired) and for depth of tooth by the indexed feed screw. It is revolved by the worm wheel fitted to its lower end and the change-wheels driven from the first motion shaft at a rate to suit the number of teeth to be cut.

A single-thread worm integral with the above-mentioned worm wheel drives the feed screw of the vertical slide and cutter box.

Involute Cutters

When using involute cutters the shaft driving the worm wheel is disconnected from the first motion shaft, and is then revolved for each tooth to be cut by the dividing plate mechanism shown.

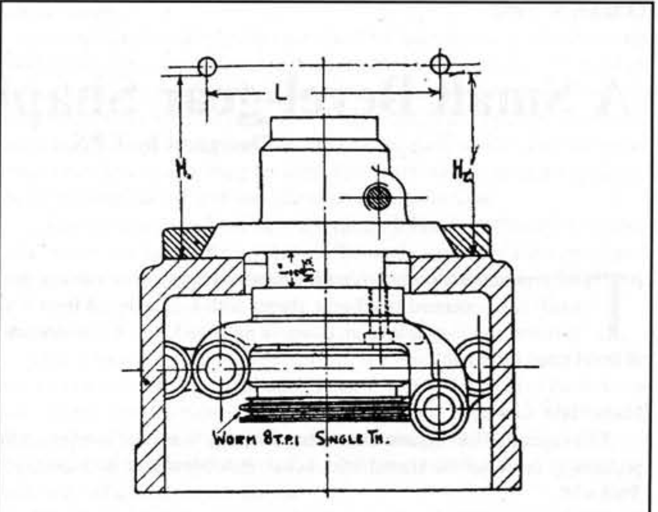

Fig. 5. End view of blank table, showing worm bracket.

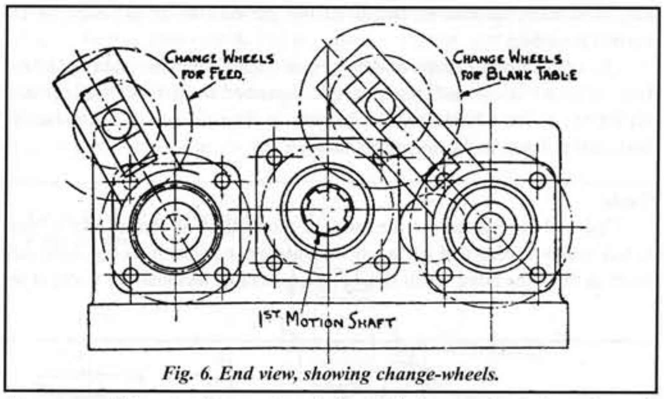

Fig. 6. End view, showing change-wheels.

Worm Wheels

When cutting worm wheels the cutter shaft would (usually) be horizontal and the vertical feed screw disengaged.

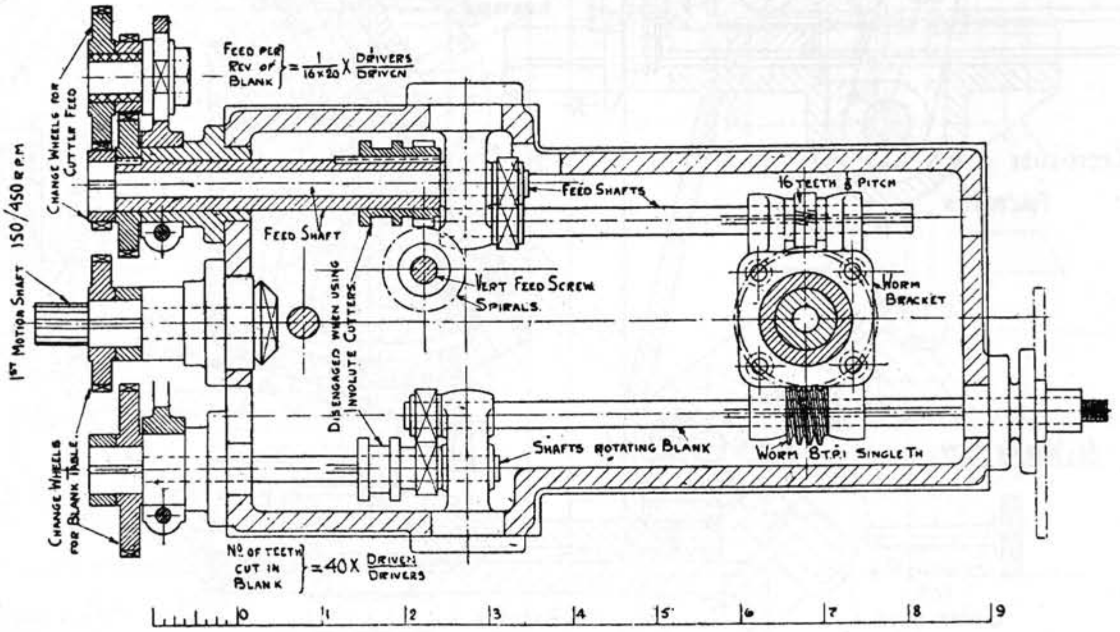

Fig. 4. Sectional plan, showing rotating and feed mechanism.

October 8, 1942

A Small Bevel-gear Shaping Machine

Designed by T.P.S.

Here we have another design by "T.P.S.", this time a shaping machine for producing bevel gears. This could be a useful addition to the traction engine builders' workshop. Together with the gear cutting machine by the same designer they would make a lovely exhibit at a show.

THE reproduced drawings (on the following pages) show a design for a small hand-operated bevel-gear shaper with a capacity of from 3 in. maximum to 7/8 in. minimum diameter mitre and 3 in. x 1 in. diameter of bevel gears (3:1 ratio).

Main Slide

This carries a 3/16 in. square tool with a stroke of 3/4 in., and is adjusted for position by means of the slotted links to suit the diameter of the blank to be dealt with.

Tool Slides

The front of the main slide is fitted with a small tool slide with vertical and horizontal movements which enable the tool to be adjusted to the correct position.

(To keep down the overend projection of the tool from the main slide these two slides are on the half-nut principle described in THE MODEL ENGINEER of 22nd and 29th June, 1939, issues, in the article on "A Turret Head"; both half-nuts are in the horizontal slide.)

Tools

One tool is required for the faces of the teeth; it is shaped like a blunt U.S.A. screw-cutting tool having its two sides at an angle of 40 deg. (one rack tooth in fact), the point width should be appreciably less than the width at the bottom of the tooth space at the small end of the gear to be cut, and it should project below the cone apex point a distance equal to the dedendum at the small end.

Two tools (right- and left-hand) with vertical cutting edges are required to finish off the flanks; the points of these tools should be set on the horizontal line through the cone apex point, and the index reading noted as the vertical slide is used for the feed in this case.

These tools are set by means of the gauges shown on Fig. 5, which shows the setting for one side of the space; for the other side the gauges are changed end for end.

Cross-slide

The main slide works in vee guides on a cross-slide which is pivoted on a pin fixed in the baseplate; the cross-slide is capable of being traversed by the feed worm in an arc of 15 deg. each side of its central position across the baseplate.

Locating Pin

This is used to lock the cross-slide in its central position; that is, when the line of stroke of the tool is at right-angles to the centre line of the blank frame pivot pins; it is removed when cutting the faces, but is put in position when changing from one tooth to the next and when cutting the flanks.

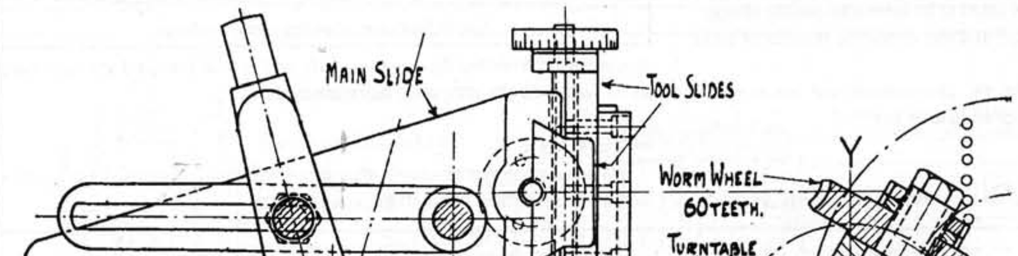

Fig. 1. Sectional elevation.

Fig. 2. Half plan and half plan in section at feed worm.

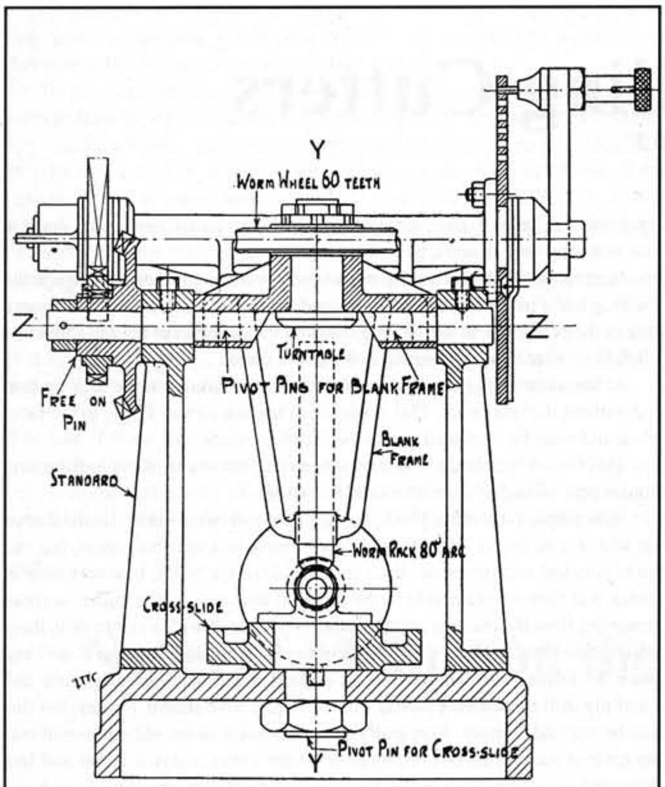

Fig. 3. Sectional end view of blank frame, etc.

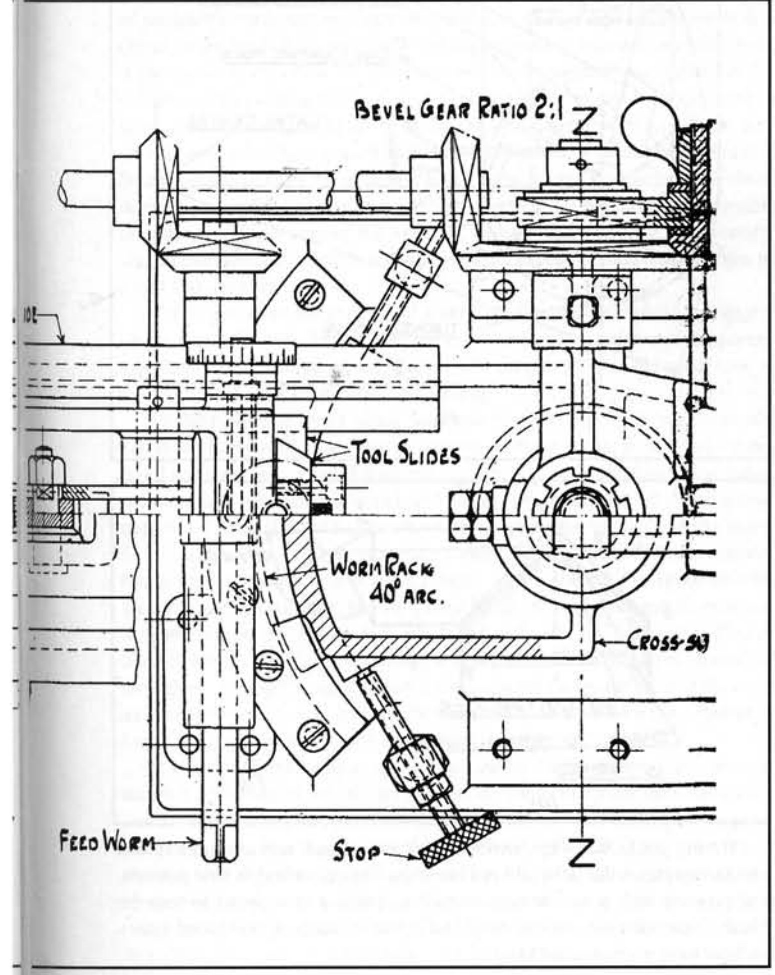

Blank Frame

Mounted on the baseplate are two standards carrying the pivot pins for the blank frame; this frame is fitted with a turntable having a central bolt on which the blank to be cut is mounted, together with suitable distance-pieces for height and a bush for the bore; the frame is adjusted round its pivot pins by the indexed worm in order to bring the pitch cone line of the blank parallel with the line of stroke of the tool when cutting the face of the tooth; also, to bring the bottom of the tooth space parallel with this line when cutting the flank.

As the pitch of the teeth of the worm rack is 0.1 in. (or 180 teeth in the complete circle) one half of a revolution of the worm moves the frame through 1 deg., and each division of the indexed hand-wheel indicates one minute of arc.

Turntable

This is rotated by the worm carried by the blank frame; at one end of the worm shaft is a conventional division plate, and since the faces of the teeth are not finished simultaneously, the division plate must have such a number of holes that is an even multiple of the minimum number of holes required to suit the number of teeth to be cut; the holes half way between those used for the first face being used for the second.

The other end of the worm shaft is fitted with a friction coupling which is engaged only when cutting the tooth faces when both the tool and the blank are being rolled simultaneously by the feed shaft, as they are then coupled through the two worm shafts and the mitre, bevel and spur gears.

(The index pin is, of course, disengaged during this operation.)

NOTE. - The centre of the cross-slide pivot pin, the blank frame pivot pins, the main and cross slides and the face of the turntable all cut one another at one point, which will then be the apex of the pitch cone of any wheel to be cut.

Fig. 4. Half section through Fulcrum Pin.

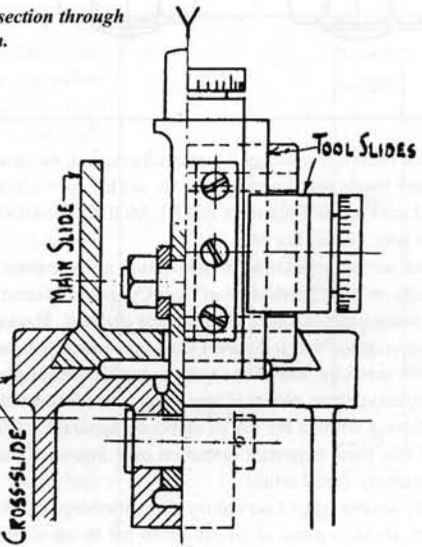

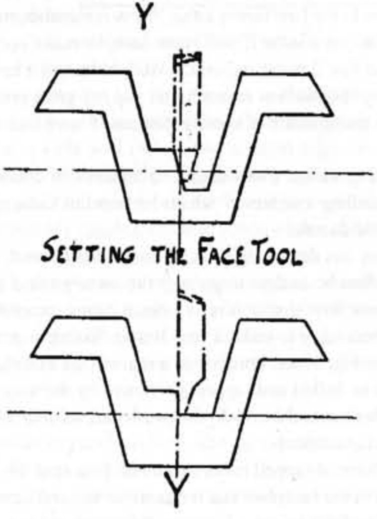

Fig. 5. Gauges for setting tools.

SETTING THE FLANK TOOL

Relieving Milling Cutters

By R.B.F.

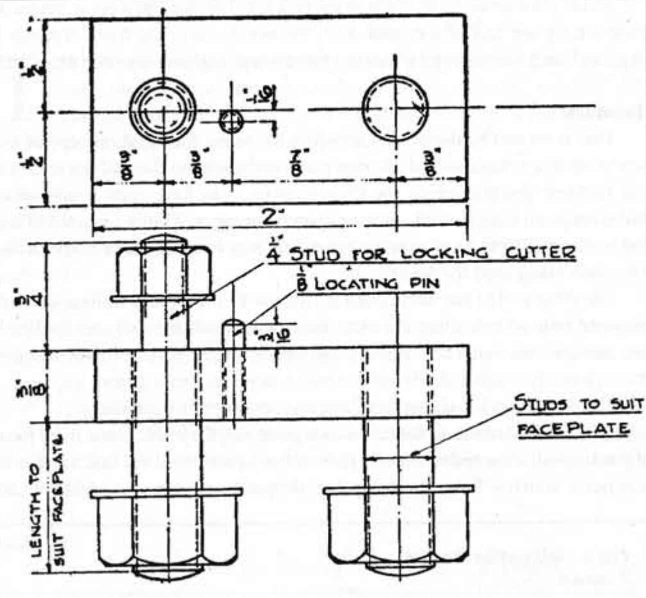

Fig. 1.

I HAVE just been convalescing from an illness, and, as usual, when I have time on my hands and cannot get in my workshop, I adopt the next best thing and read up back numbers of THE MODEL ENGINEER, an occupation, by the way, I never tire of.

I remember seeing at the time of publication in December, 1941, Mr. Ian Bradley's article on "The Production of Gear Cutters," but must confess I took little interest at the time, as I have always made my own. Having read the volume of correspondence that followed I have just turned these articles up and read them more carefully, and must say my sympathies have gone out to those who wished to make these cutters if they knew a satisfactory method of backing off or relieving without the use of elaborate apparatus. Mr. Bradley certainly passed this most important operation over in a very casual way in an otherwise extremely useful article.

I always remember when I served my apprenticeship, more years ago than I care to think about, a piece of advice given me by an old turner who was introducing me to my first centre lathe, "Now remember, my lad, there is nothing you can't do on a lathe if you know how, so make up your mind to learn thoroughly and you'll never regret it." Well, he may not have been quite right, but he certainly did his best to teach me, and my great gratitude has gone out to him for the many hours of sheer enjoyment I have had during my life with the lathe.

Among other things I was taught to make were cutters for "Them there new fangled milling machines" which he "couldn't abare," and since then I must have made dozens.

Mr. Bradley has dealt with sizes, forms of tooth, steel, etc., very ably, and it would therefore be useless to go over the same ground again. So my main object is to show how simple it is to make a cutter completely in the lathe.

First it is necessary to make a very simple fixture to go on the faceplate (it is illustrated in Fig. 1, and consists of a main piece of mild-steel 1 in. x ⅜ in. x 2 in.). This is drilled and tapped as shown; by the way, all sizes given are only to show how to make and do this work and, of course, can be adjusted to suit personal requirements.

In one of the end-tapped holes make and fit a stud the large end of which to suit the slot in the faceplate and the small or top end turned true to fit stiffly the centre hole of the proposed cutter. A locking nut is provided to hold the cutter tightly in place. I use 40 threads per inch for this nut; it seems to be smoother and grips tighter; incidentally, I am very partial to 40 t.p.i. and use this screwing very frequently.

Next to this stud a locating pin made of silver-steel is fitted to engage the locating holes in the cutter. The upper surface of this pin must be on the same line as the centre line of the locking stud and the diameter of the pin should be slightly smaller than the locating holes in the cutter.

At the other end of the fixture fit another stud similar to the locking stud but without the small end. This is merely to make a further fixing to the faceplate and must be so placed to suit the faceplate slots.

This fixture is bolted to the faceplate so that the centre of the locking stud comes near enough 2⅜ in. from centre of plate.

Now prepare the cutter blank, Fig. 2. I have shown a cutter 1¼ in. diameter with a ¼ in. centre hole. I usually make mine this size, but, again, this can be to personal requirements. Face up one side of the blank, then turn over in chuck and face the other side to the required thickness of the cutter; without removing from the chuck mark the centre of the blank with a centre drill, then, with the dividers, scribe a ¾ in. diameter circle for the locating holes, drill and ream the centre hole and then rig up drilling spindle and dividing plate and carefully drill the locating holes. You will see I have shown 7 holes, but this can be any odd number. I generally use seven holes, as an odd number of cutter teeth is better than an even number, as the cutter makes a better and less wavy cut.

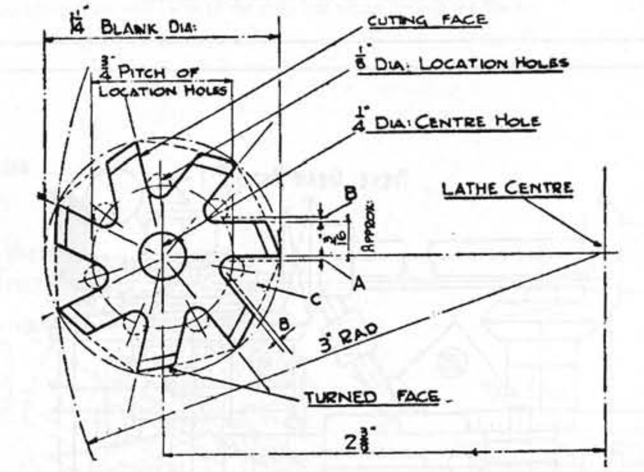

Fig. 2

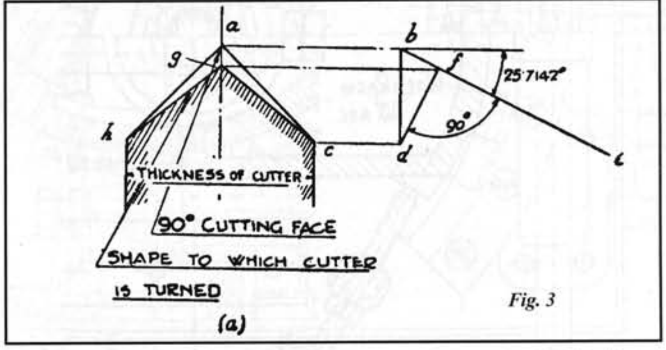

Fig. 3

Having got to this stage, remove blank from chuck and assemble fixture and face-plate on the lathe and put blank on fixture, locked in first position, and proceed with a narrow round-nosed tool and a slow speed to turn the blank. Note the cross-slide setting, and repeat for each of the second sides - we now have a seven-sided blank.

A word now as to the shape of the cutter tooth. You will see that the cutting face is at an angle to the turned face. It will therefore be necessary to form the cutter to a different shape than it is desired to cut.

To give you the idea and at the same time make it as simple as possible, we will suppose we are making a cutter to form a 90 deg. vee. It will therefore require a 90 deg. vee shape on the cutting face, but the turned shape will be different. I find the best way to arrive at this is to set the cutter out on the drawing board to many times its full size, as follows (see Fig. 3). Use a smooth paper and a hard pencil sharpened to a fine point, draw (a) to the shape of the cutting face, then project lines *a* and *b*, and *c* and *d*, and draw *b*, *d*, vertically jointing the two. Draw line *b*, *e* to the same angle as chord of the turned face of the cutter - for a 7-tooth cutter this angle would be 25.7142 deg. Now draw *d*, *f*, at right-angles to *b*, *e*, project point *f* back to centre line at *g*, then join up *g*, *h* and *g*, *c*; the angle or shape thus formed is the shape to which the cutter must be turned. This method applies to all forms of cutter teeth.

The Use of Form Tools

When gear cutters are being made, rough each side of tooth with a round-nose tool and finish with a form tool. If the tooth is very small a single form tool can be used, but if the tooth is large a right- and left-hand form tool is better. These form tools are quickly made of silver-steel, I use the Nulock type of tool-holder; the cutters are 3/16 in. diameter and can be soon filed to shape with needle files. It is well to make a template of the cutter shape from a small piece of scrap sheet metal so that the form of tooth can be checked; always remember the cross slide setting for each tooth as turned and they will then all be exactly alike.

Having finished forming the cutter, all that now remains is to cut away the unwanted metal between the teeth. Mount the cutter on a suitable mandrel which has been set to run true in the lathe; if the lathe is not fitted with draw-in collets, use the four-jaw chuck and indicator.

Now rig up the milling-head and the dividing plate, and fit small slitting saw to run horizontally, with top face at centre height, and cut slots A through to the locating holes; now reset saw so that the bottom face is approximately 3/16 in. above centre height and cut slots B through to the locating holes, when pieces C will drop out; your cutter is now ready for heat treatment and touching up with an oilstone slip.

This has taken some time to describe, but when the fixture has once been made, cutters can be made in less time than it takes to tell, and, as already stated, I have made many by this method, not only for my own use but for special jobs in a tool room, and they have always been successful.

December 2, 1943

Notes of Milling on the Lathe

By J. LATTA

Milling in the lathe is a technique used by many. Even if you have a mill there are occasions when you do not want to disturb a set-up on the mill and you have to use the lathe pro tem. Here are some good hints and tips that are as valid today as the day they were written.

At some point in the construction of a model it is generally necessary, or at least desirable, to do some milling; keyways in shafts and steam ports are common examples; but when the need arises, it is often found that what should be a simple job and a nice change from ordinary lathe work becomes a difficult operation, and is often badly executed, due to the use of unsuitable tools and methods; and recourse is even had to a hammer and chisel, when the lathe is ready and waiting to turn out neat and accurate work if the owner knows how. A great deal has been written about milling in the model engineer's lathe, but in many cases the problem tends to be over elaborated, and the amateur thinks in terms of milling appliances with many and complicated movements, lathe overheads, and an array of expensive cutters. He may even consider the installation of a separate milling machine. Without denying the usefulness of all these things under certain circumstances, I maintain that for 90 per cent of the jobs that crop up they are quite unnecessary, and all one needs as a rule is a good vertical slide and a knowledge of how to grind and use simple cutters.

For a start, even the expense of a vertical slide can be avoided by rigging up the top slide on an angle plate, but this should be regarded as a temporary expedient only, pending the acquisition of a proper slide, as the small area of the tool rest will be found rather a handicap.

In the course of many years' experience of milling, both professionally and in my home workshop, I have come across many ideas, some of which are novel and some not, which I think may be of use to many readers whose lathes are their only machine tools and who must needs use it for all their milling purposes. Even if a milling machine is available, that is only half the story, for, to do good work, true and sharp cutters are needed, and this eventually brings up the problem of sharpening them. Unless the lathe is rigged up with a grinder for this purpose, the work must be given out, which means time and expense and, to my mind, takes away that self-contained and self-sufficient character from the home workshop, which is one of the principal charms of the hobby. Actually, bought cutters are quite unnecessary for most of the work an amateur has to tackle, and excellent work can be done with the simplest of tools, as I hope to show in the course of this article.

It is best to mount cutters in the lathe mandrel wherever possible, so as to take full advantage of the stiff spindle and the range of speeds provided by the ordinary lathe drive, but, as many of the cutters used will be small, it is a great advantage to have a high top speed, say, about 700-1,000 r.p.m. As this is about double that usually obtainable on a small lathe, some special arrangements, such as a temporary large pulley on the motor may have to be devised if this speed is not normally available. Such a speed is hardly possible with foot drive, of course, and treadlers must be content with the best speed their leg muscles can maintain.

A point often overlooked is the absolute necessity for using a high grade thin oil in the headstock bearings of any small lathe. Unless a really thin oil is used it is impossible to adjust the bearings as closely as is desirable and still have freedom to run at high speed. Ordinary machine oil is useless, and many complaints about chatter and stiff running of lathe mandrels would disappear if they were readjusted to run with thin oil. On my own 33/4-in. lathe, which has a fairly robust spindle, I find "3 in 1" oil, or Wakefield's "Oilit," satisfactory, but for a lighter lathe an even thinner oil would be desirable.

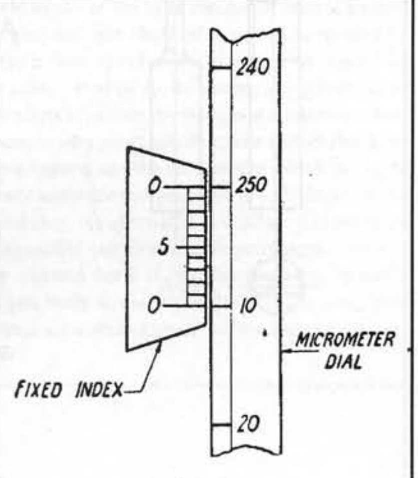

Fig. 1.

If the spindle is removed at any time, it pays to check it for balance. It is very little work to remove a little metal from inside the pulley casting on the heavy side until the spindle will roll on two straight edges without any tendency to come to rest in one position. A couple of good steel rules make suitable straight edges. It is surprising how far out of balance most pulleys are, even on lathes by reputable makers, and correction of this defect makes all the difference in smooth running.

The next point is the provision of micrometer dials on all the lathe feed screws, as one of the main advantages of milling is lost if one has no means of accurately determining the depth of cut. The cross-slide screw and the vertical slide will probably be provided with dials, but if not, they should be fitted.

The lead screw will be used to move the saddle along the bed, and a micrometer is not usually provided here, and so may have to be made; and a difficulty arises here because of the comparatively coarse pitch of most lead screws. For instance, if a 4 per inch screw is fitted, the micrometer dial must have 250 divisions to give thousandths, and it is a very tedious proceeding to mark off such a number.

An easy way out of this difficulty is shown in Fig. 1. The dial is marked off and numbered in hundredths, which makes only 25 divisions necessary. The thousandths are marked on the special index as shown, which has 10 divisions just spanning the spaces on the main divisions on the dial. The marking of the 10 divisions on the index can be done in various ways, depending on the resources available and the ingenuity of the individual; the distance between each is obviously 1/250 of the circumference of the dial, so can easily be calculated.

A micrometer for a 4 per inch lead screw must be at least 3 in. in diameter if the graduations are to be reasonably spaced, and this fact should be borne in mind before making it.

Now, as regards the cutters themselves, these, in nearly all cases, will be end-mills mainly because an end-mill suits most jobs but also on account of the fact that heavy barrel cutters or side- and face-mills are unsuited for use in a small lathe.

The conventional end-mill with four or more cutting edges is of little use to model engineers; apart from the difficulty of sharpening when blunt, the chip space is insufficient for free cutting. The type shown in Fig. 2 and often recommended is not much better as regards its cutting qualities; the cutting edges have a negative rake at the sides and scrape rather than cut end, unless very carefully chucked, it is difficult to get both edges to do an equal amount of work.

I can recommend the single-edge cutter shown in Fig. 3 as being far the best of any I have so far tried. It is simple to make, it is fast cutting due to plenty of clearance for chips and is strong. It will do equally good work on either hard steel or light alloy. It is easily made in a few minutes on the grinding wheel from suitable sized round stock, so that ready hardened high-speed steel can be used if desired, but I find that silver-steel fulfils all my own requirements.

To make a ¼-in. diameter cutter, start with a piece of ¼-in. silver-steel, as at *A* in Fig. 4. Then grind a flat at one end like a D-bit until it appears as at *B*. It should be ground away to half its thickness or more. If ground more than halfway the cutter will have a positive rake and will be very fast cutting, but becomes rather weak. Just half way is a good average.

Then bevel the front edge to give about 10 degrees of clearance each way, as shown at *C*. Next, grind another bevel, as shown at *D*. Finally, grind a clearance right round the remaining portion of the outside diameter and until you reach the stage shown at *E*, being careful to retain a cutting edge of the full diameter at *X*. It is preferable to leave a slight witness line here, which can be stoned up later.

This completes the making and, after hardening as usual and touching up the edges on an oilstone, it is ready for use.

It can be made in all sizes from ½ in. down. But with very tiny cutters below about 3/16 in. it is better to turn down to the size required on the end of a larger piece, so as to have a reasonably stiff shank.

A cutter of this description is suitable for slots, keyways, steam engine ports, and the like, and will also machine flat surfaces of moderate width. If two overlapping traverses have to be made to cover the width required, a small mark or ridge between the two cuts is almost unavoidable, and this may or may not be a serious matter, depending on the accuracy required.

For greater widths which must be tooled at one traverse, I often use an ordinary single point tool in a holder held in the 4-jaw chuck, set so that it can sweep

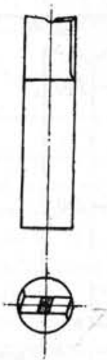

Fig. 2.

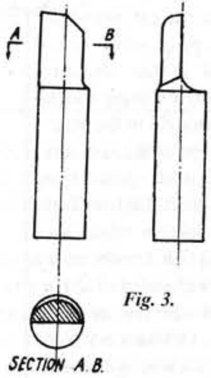

Fig. 3.

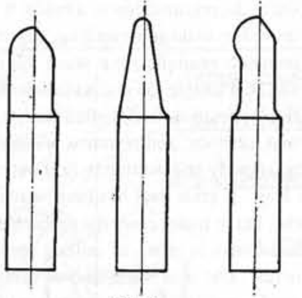

Fig. 5.

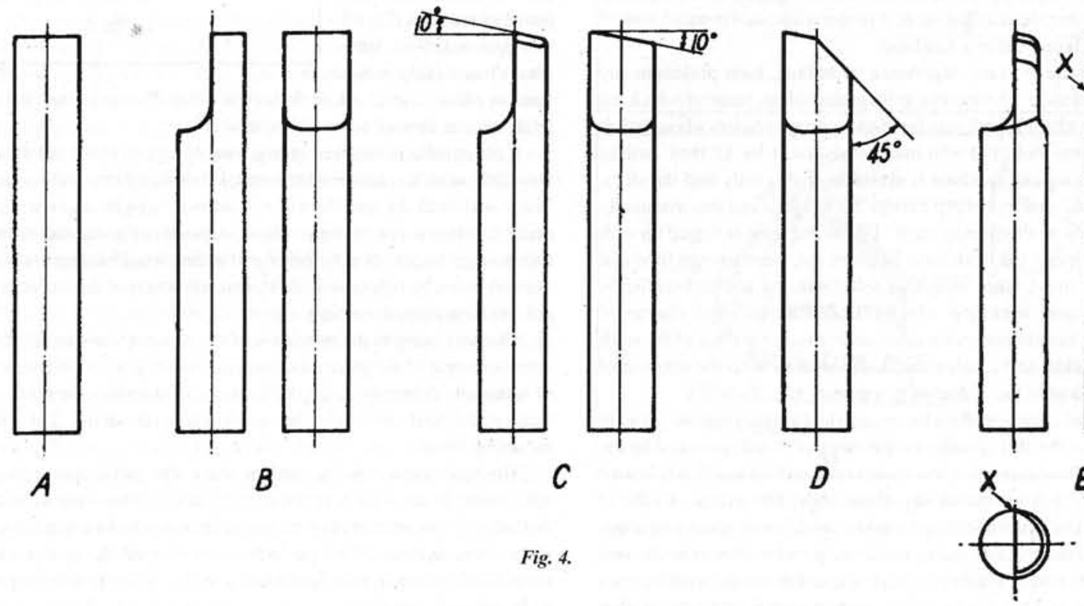

Fig. 4.

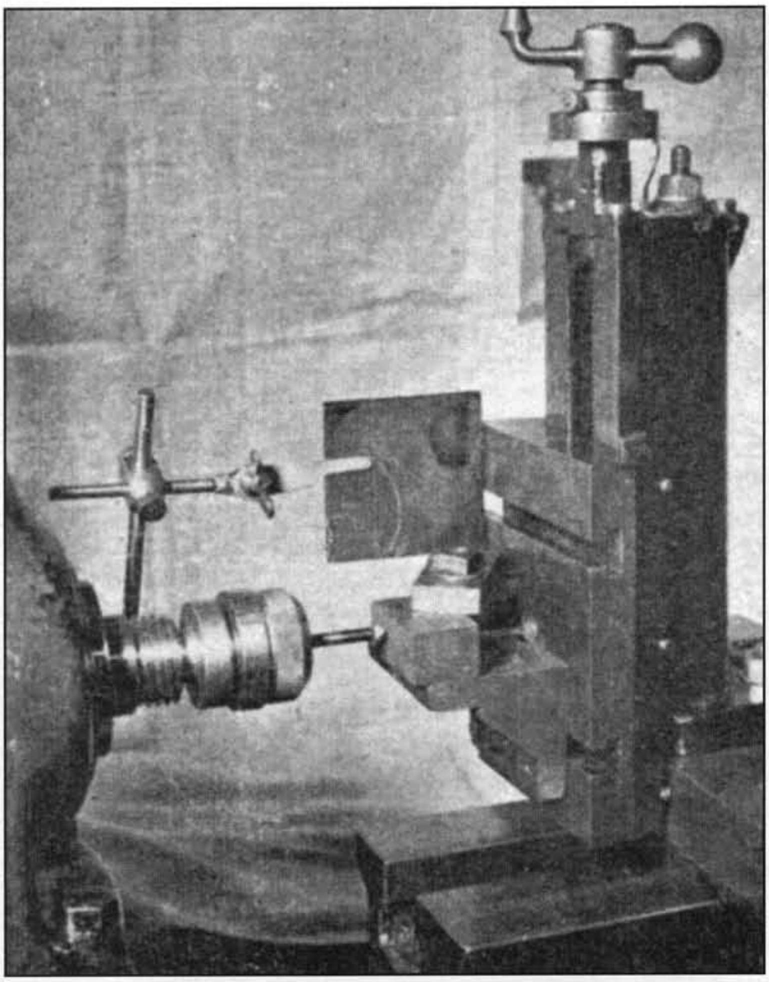

Lathe set up for "contour" milling.

out a circle of sufficient diameter to cover the surface required.

When cutting slots for keyways, etc., in steel, a lubricant can be used if desired, but, unless the flow is copious enough to wash away the chips as they are formed, it is not much use and may be a disadvantage if it causes the cuttings to cling to the cutter and be carried round with it, thus leading to a rough finish on the work. The ideal is a jet of compressed air directed at the point of the tool, and those with a compressor available can make good use of it here.

When cutting a keyseat, do not make the cutter the full width and endeavour to size it in one pass; this is courting trouble in advance. The cutter should be slightly small; only a few thousandths less is necessary, just to be sure that the slot won't come out oversize; then, after going the full depth in a series of cuts, a little can be taken off each side of the slot to smooth it up and bring it to the exact size to fit the key.

For keys or feathers, the handiest material is square silver-steel, which can be obtained in sizes from 1/16 in. upwards. I find it pays to keep in stock a length of all the sizes likely to be used.

It will be found when using the side of an end-mill that a much better finish is left on the work when the feed is with the cutter and not against it; in other words, when feeding the work in just the way the book says you shouldn't. The improvement in finish is generally so marked that it is worth while taking the finishing cut in this direction at any rate, taking due precautions against the chance of the cutter gathering up by being sure the slides are tight and the feed not excessive.

Single-edge cutters of this type need not be confined to those with square ends, as in Fig. 3, but can be made with any profile desired, either by hand grinding or, if greater accuracy is desired, by turning the blank to a template beforehand, Fig 5 shows some possible shapes, of which the ball-end type is the most generally useful, as it leaves a neat radius. The flat in this case must, of course, be ground to exactly half the thickness of the cutter.

Cutters can be held in any of the lathe chucks, or even at a pinch in a drill chuck, provided the taper shank of the chuck is secured by a drawbolt through the hollow spindle, as it is unwise to depend on the hold of the taper alone. Best of all, of course, is a proper set of split chucks for the headstock, as then overhang is at a minimum, but, failing this super-luxury, a very good substitute is a collect chuck, as shown in use in the photograph and the dimensional sketch in Fig. 6.

A taper shank is not advisable in sizes below No. 2 Morse, as the necessary rigidity is lacking; the alternative is to screw it to the mandrel nose instead, at a possible sacrifice of some permanent accuracy.

The advantage of a proper chuck is that it is much easier to see the cutter at work; a larger chuck often gets badly in the way and, by fouling some part of the work, may even necessitate an undue extension of the cutter with consequent lack of stiffness.

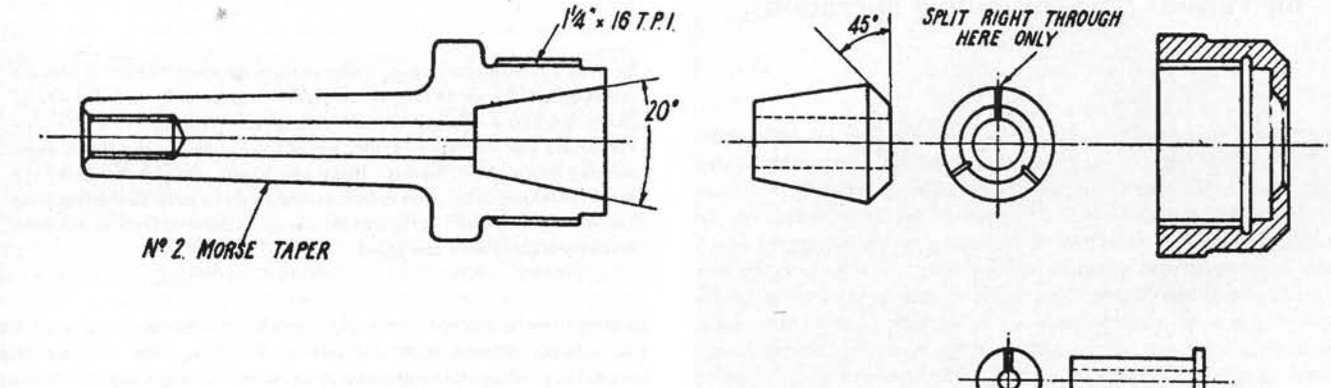

Fig. 6. Collet chuck

An interesting application of the milling process is what I might describe as "contour milling"; briefly, this is the machining of the surfaces which are so irregular in outline that the cutter requires to be guided by a profile template of some sort.

Normally, any machining of such shapes is avoided by casting them, or by building up the part by brazing or otherwise, but it may happen that a casting is unsuitable for the purpose or is unobtainable, in which case it is handy to know of some method of "carving from the solid," so to speak, in the same way as a sculptor does his work in stone.

The problem is an everyday one in die-sinking work, and the following tip may be of occasional use to model engineers, as with the aid of a few simple arrangements quite complicated shapes can be carved from solid material with a milling cutter to within a fair degree of accuracy.

The photograph shows the idea. An adjustable arm is rigged up on the headstock in some convenient part; in my case, I use a hole tapped in the back gear arm to support the rig. A flat tin tracer, cut to the same profile as the cutter is secured to the end of the arm by a thumb-bolt, and an outline of the contour required is drawn upon a piece of sheet metal, which is held in any convenient way to the vertical slide or to the saddle.

In the photograph, the work clamped to the angle plate is all set to have a semi-circular recess milled in it, conforming to the outline drawn on the metal plate at the back. Readers will please refrain from asking what the job is, or why it should need such a semi-circular recess; for, as a matter of fact, the photograph was only taken to illustrate this article and to show the idea more clearly than is possible form a written description alone.

The work having been brought up to just touch the cutter at the point where the cut is to start, the tin tracer is then adjusted so that its point also coincides with the similar point on the drawn outline.

Having secured everything, cutting then proceeds, the cutter being guided by keeping the tip of the tracer as close to the line as one's skill in manipulating the feed handles will allow. With a little care, the required contour can be followed with surprising accuracy.

The idea is of most value for internal work, where the cutter is working in a hole or hollow and therefore is not easily seen but external surfaces are equally easy.

I hope that these notes on what can be done with modest equipment will be useful to those who have hitherto avoided this interesting process under the mistaken impression that it is an operation of great difficulty involving the use of a lot of expensive apparatus.

December 5, 1946

MILLING IN THE LATHE

By "NED"

Section 4 – Rotary Spindle Milling Attachments

A general review of the principles, appliances and methods employed for adapting the lathe for various types of milling operations.

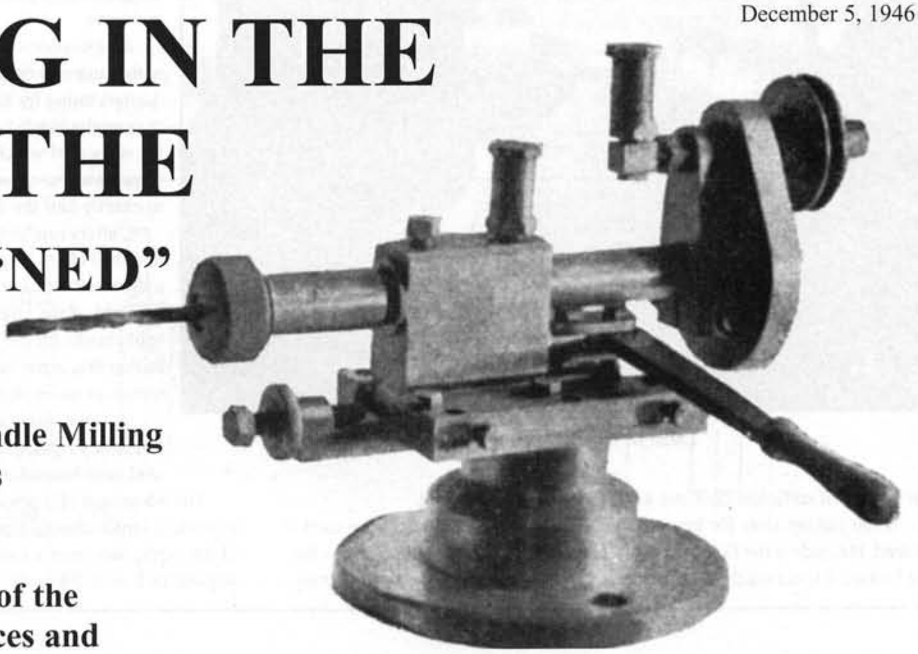

A light milling spindle with slide and sensitive feed, by Mr K. N. Harris.

In 1946 a contributor writing under the pen name of "NED" supplied a series of articles on Milling in the Lathe. I have only included one of the series, part 4 - Rotary Spindle Milling Attachments, and in this article we are introduced to another well-known name in the model engineering hobby, K. N. Harris. Many people will consider that using the lathe for milling is the poor relation compared to a purpose-built milling machine but, on many occasions the use of a milling spindle in the lathe will save a lot of time and effort.

THERE is scope for design in the bearings of milling and drilling spindles, and many of these have been fitted with contractible tapered bushes, also double cone bearings, single or opposed, and ball or roller radial bearings. It should, however, be observed that the more elaborate the bearing, the more meticulous must be its accuracy of construction and adjustment; and many attempts to improve bearing design have been abortive because of deficiencies in these respects. Ball and roller bearings, in particular, are difficult to apply to real advantage on these simple spindles, with the exception of those used purely to take end thrust. Taking things by and large, the constructor of such an appliance will find that a really well-fitted parallel spindle is hard to beat for general work.

Milling and drilling spindles equipped with special slides and mounting standards may be found advantageous for certain classes of work. A very ingenious example of such an appliance made by Mr. K. N. Harris, for use on a 4-in. James Spencer lathe, is illustrated in the next two photographs. It is designed to fit the cross-slide of the lathe, the base flange of the standard being made to match that of the swivelling top slide, so that it fits the seating provided for the latter. A horizontal slide is provided for the able travel-limiting stop. The driving pulley may be attached directly to the spindle, or it may operate through the spur reduction gearing, which, as seen in the photographs, is completely enclosed in a casing which clamps on the spindle-bearing housing. Lubricators are provided for both the spindle and the gear-shaft bearings, and a collet chuck is fitted to the spindle to carry drills or milling cutters. The utility of the horizontal slide and sensitive feed on this appliance is found mainly in connection with fine drilling, for milling the slide can be locked, and feed applied by using the longitudinal and cross slide adjustments of the lathe.

The Potts Milling Appliances

One of the best-known commercially-made rotary spindle appliances at

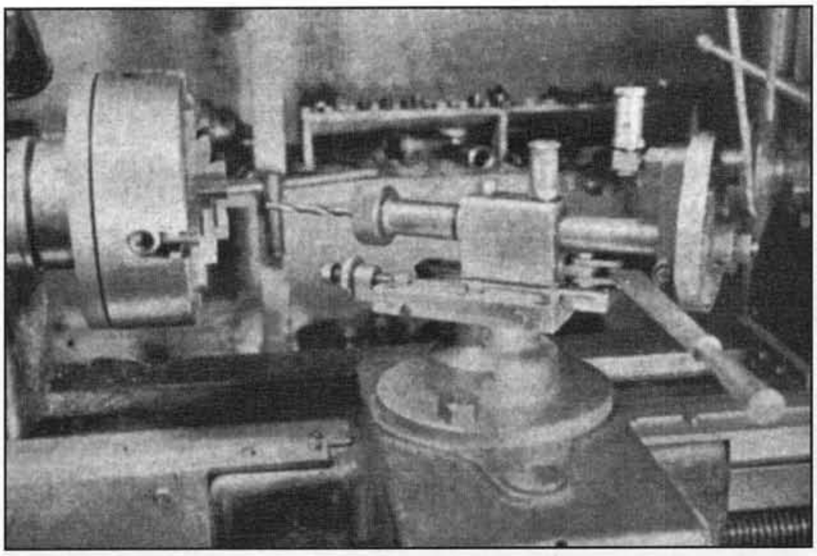

Mr Harris's milling spindle in use on a 4 in. Spencer lathe.

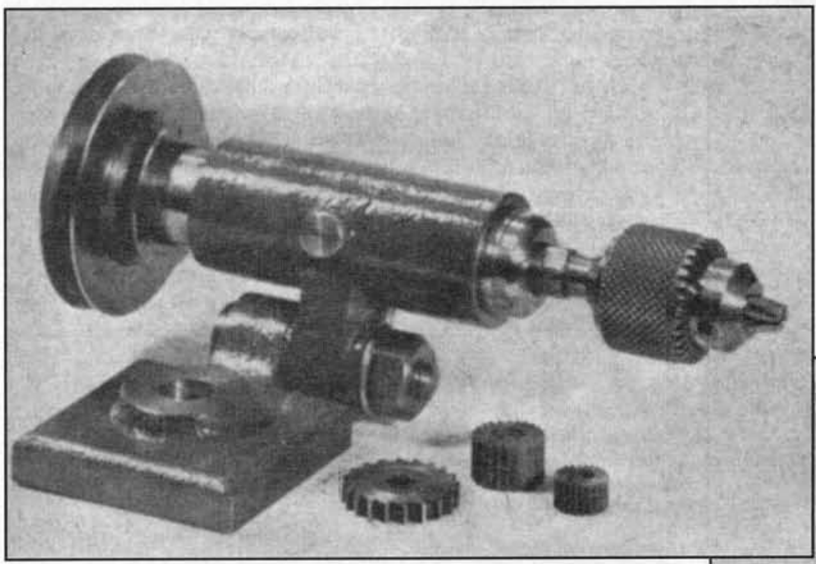

The Potts milling and drilling spindle.

present on the market is that by Mr. G. P. Potts, of Ruthin Road, Denbigh, North Wales. The utility of this device, which is extremely well made and finished, though moderate in cost, can be attested to by many readers of THE MODEL ENGINEER. It embodies a hollow spindle, running in closely-fitted bronze bushes, with adjusting and locking collars to take up end play, and a two-step cone pulley for vee belt keyed on the end. The nose of the spindle may be supplied bored to take either No. 1 Morse taper or "A" size collets.

In order to enable the height of the spindle to be adjusted, the spindle housing is attached to the sole-plate by a pivot bolt, which allows it to be swung up or down in an arc around the bolt centre, so that when clamped on the top slide by the tool-post stud, a sufficiently wide range of elevation adjustment may be obtained for most ordinary purposes. It is, however, practicable to increase this range by mounting the complete appliance on a vertical slide, as will be seen later. For lathes which have different forms of tool-post fittings, other than the single stud type, it is possible to adapt the Potts spindle by modifying the mounting bracket or sole-plate, and it is shown here in a form suited to the 3½-in. Drummond or Myford "M" type lathe, which has a large diameter cast pillar on the top slide for the attachment of the tool-post. In this case, a split clamp is provided to mount the milling spindle.

This photograph also shows how jockey pulleys may be supported from the spindle housing to enable alignment errors in the driving belt to be corrected, or to change the angle of drive. The arm on which the jockey pulley shaft is mounted is pivotally attached to the lug of a split clamp which embraces the spindle housing. Jockey pulley fittings are not included with the standard equipment of the appliance, but are obtainable as extras.

Vertical-Column Milling Attachments

Another useful milling attachment made by Mr. Potts, embodying a spindle similar in general essentials to that described above, is illustrated in the next photograph. This type of appliance is representative of a class of "vertical column" milling attachments which have been very popular in the past, and have been made in various forms, with minor variations in detail design or equipment, by amateur constructors. It may be said that the Potts attachment embodies all the essential features of its type, and in common with the milling spindle described, is very well made and fitted.

The hollow vertical column which forms the main slide is rotatably mounted by a long centre stud, on a flat baseplate flange, which can be shaped and drilled to mount on the cross-slide of the lathe. On most British lathes, a plain rectangular base, with two bolt holes or slots positioned to match the tee-slots in the cross slide, will fill all requirements; but on some foreign lathes, which do not have the tee-slotted table on the cross slide, a special form of base may be necessary. The sliding bracket is split for fit adjustment or clamping on the pillar and has a tapped lug which forms the lead-screw nut. A key fitted to the bore of the bracket and sliding in a key-way running the full length of the pillar maintains alignment of the vertical traversing movement.

The spindle housing is mounted on the sliding bracket by means of a pivot stud, which provides swivelling movement of the spindle to any angle, and a graduated protractor is provided on the seating flange. It will be seen that this movement, in conjunction with the rotatable movement of the pillar provides "universal" or "spherical" angular adjustment of the spindle.

It may be observed that some attachments of the vertical-column type have been found to lack rigidity, owing to weakness of the column, the bracket, or the means of preventing the

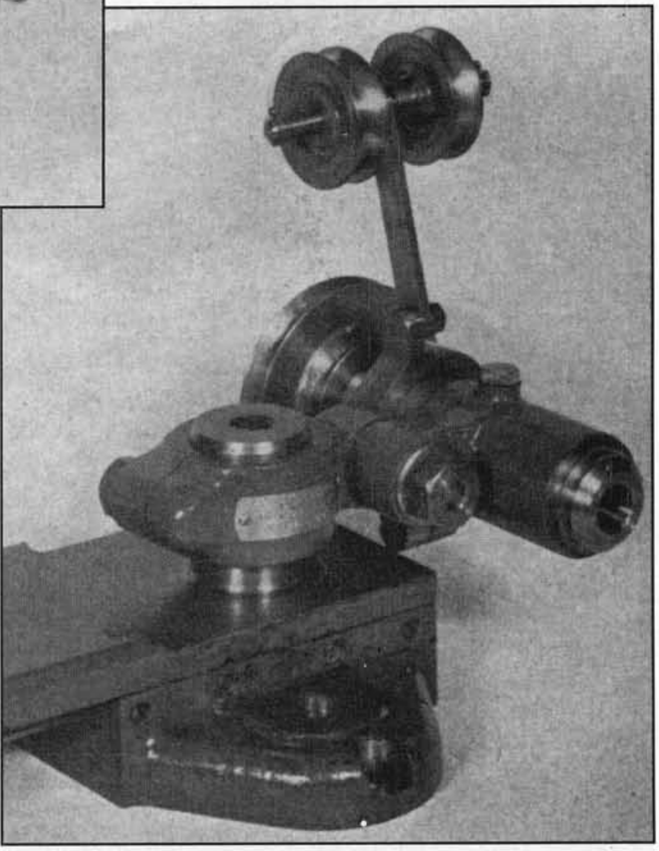

Adaptation of the Potts spindle to fit 3½ in. Drummond "M" type lathe.

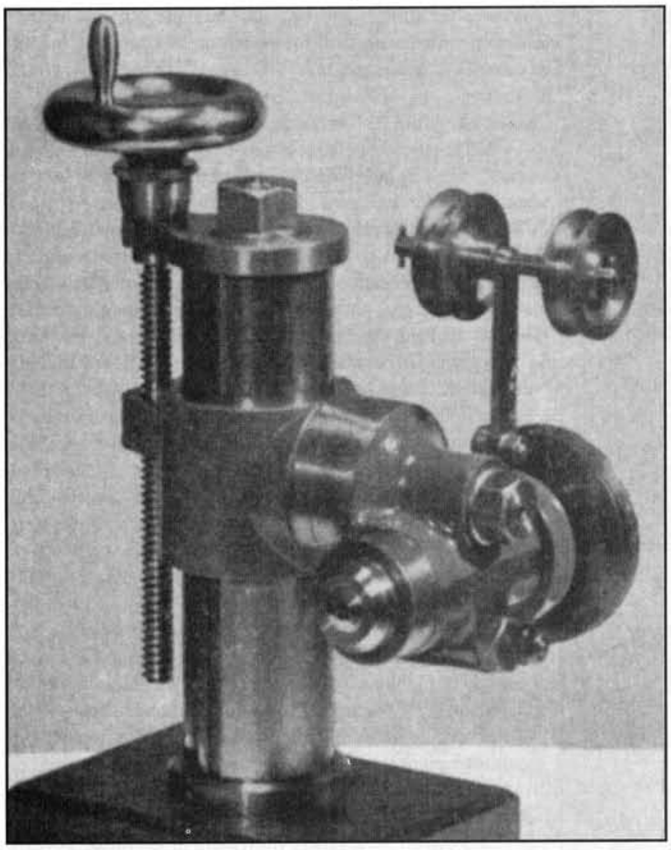

Potts milling attachment with cylindrical vertical slide.

latter from rotating on the column. The use of a sliding key, of limited size, to take heavy torque stresses in the slides of machine tools, is a feature which has often been strongly criticised, as inherently unsound, but a great deal depends on details of design, and even more on the way they are carried out. A column of prismatic form would probably be more rigid against torque stresses but it would also be much more expensive and difficult, both to machine and fit, than the round column, which accounts for the popularity of the latter in milling attachments employed in amateur workshops.

Milling Spindle Arrangements

Some highly ingenious and practical applications of the Potts milling spindle have been devised by Mr. Ian Bradley. These have already been described by him in THE MODEL ENGINEER but in view of the way in which they demonstrate essential principles, it is hoped that no apology will be necessary for bringing them once more to the notice of readers. Mr. Bradley uses the simple form of the Potts milling spindle mounted on a standard senior non-swivelling vertical slide, for the particular examples of operations illustrated here. It will be seen that the range and adaptability of the equipment are further extended by the use of a slotted plate of mild steel introduced between the sole-plate of the milling spindle and the table of the vertical slide. The gear wheel seen in two of the photographs is simply a scrap component, utilised as a parallel distance piece to increase the effective range of overhang in front of the vertical slide. A very neat form of jockey pulley mounting will be observed, consisting of a split clamp on the spindle housing, with a long stalk attached, on which is clamped a vertical pillar carrying the jockey pulley shaft.

The first example shows the assembly mounted on the cross-slide of the lathe, with the spindle vertical, so that it can be used for vertical milling operations on work held in the lathe chuck in the particular case shown it is cutting a keyway in a shelf. As already described this operation can be done without a rotary spindle appliance, by running the cutter in the lathe duck and mounting the work on the cross slide but the particular advantage of a vertical spindle is that it facilitates observation of the work, and in many cases simplifies setting up and holding, especially if it is desired to make angular or indexing adjustments around the work centre.

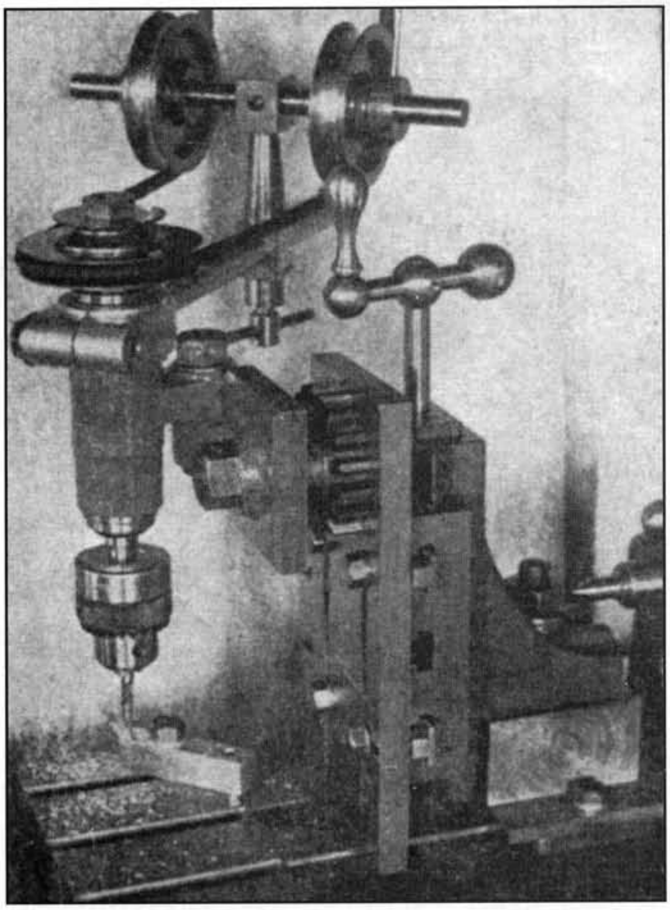

Arrangement of spindle and vertical slide, with work mounted on cross slide.

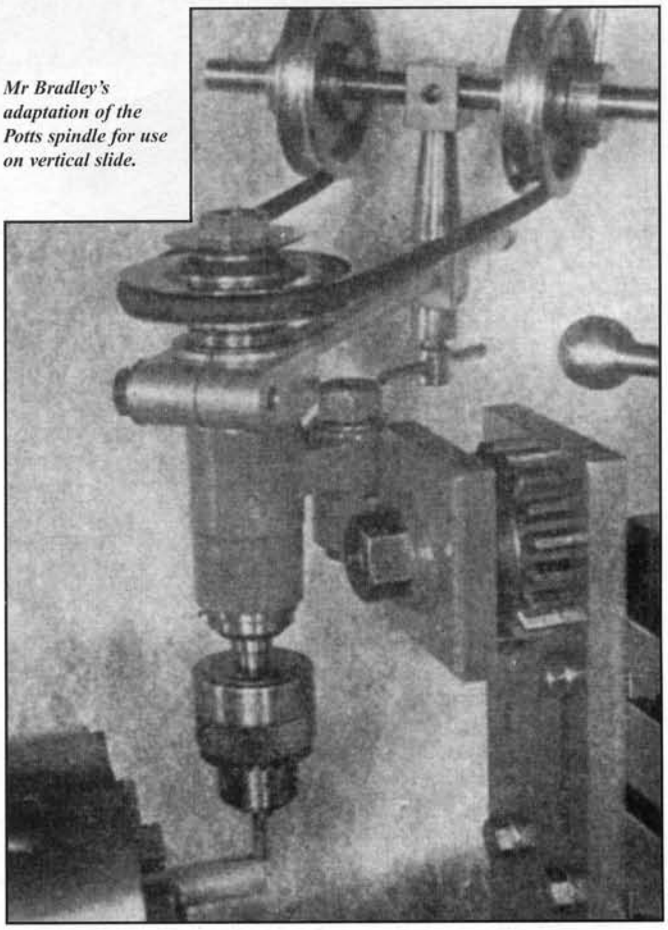

Mr Bradley's adaptation of the Potts spindle for use on vertical slide.

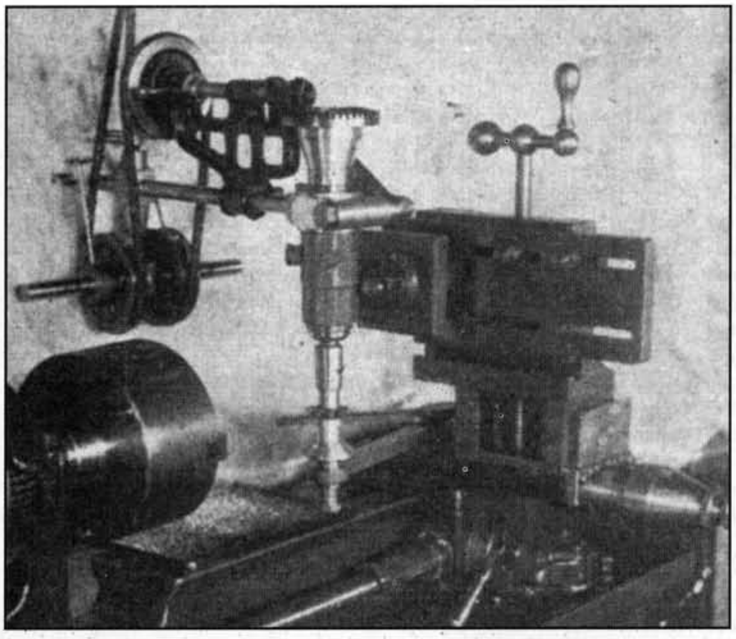

Spindle with bevel reduction gear and steady bearing for use in cutting spur gears.

It will readily be seen that with the assembly set up as shown, milling should be carried out on a piece of work mounted rigidly on the lathe bed, as the longitudinal, cross, and vertical adjustments are all available for moving the cutter spindle. Automatic traversing feeds, as provided on the lathe, are also available for feeding the cutter.

In the second example, the assembly is mounted on a parallel packing block on the lathe bed, to the right (i.e. tail-stock side) of the saddle, in which position it is available for vertical milling of work clamped to the cross slide, as shown. The driving arrangements are exactly as before, and again, any automatic feeds with which the lathe may be equipped, are available. In both these examples, the spindle is not restricted to the vertical position but may be set at any angle, or even in the horizontal position, if desired.

The third example shows the assembly again mounted on the cross slide, but in this case it is arranged for dealing with a heavier milling operation - namely, spur gear cutting - for which a reduction gearing in the spindle drive is desirable. This is provided in a very ingenious manner, by pressing into service the components of a small hand drill, including the bevel gears, which are in this case used in the reverse way to that originally intended, that is, to obtain a reduction instead of an increase of speed. The drill frame, with its spindle and bevel pinion, is mounted on the jockey pulley arm, and the crown wheel, by means of a suitable adaptor, is attached to the milling spindle. No alteration is made to the jockey pulley fittings, but the spindle is underslung from the arm to suit the particular driving arrangements employed.

The milling cutter is carried on an arbor which fits the socket of the spindle, and in order to support the lower end of the arbor, an outrigger bearing is arranged in an arm bolted to the rear end of the cross slide, alignment of this bearing being adjusted before final clamping down. As the cutter works at a fixed height for this operation, exactly level with the lathe centres, no working adjustment of the vertical slide is required, and once set, the slide gibs may be tightened up to prevent inadvertent movement. The outrigger bearing is equipped with a lubricator, and immediately above it, a conical collar is fitted to the arbor, to deflect swarf and dust which might otherwise get into the bearing.

Other forms of milling spindles or cutter frames may be adapted to work in similar ways to that shown here. To those readers who question the utility of lathe milling appliances, the quality of the work turned out by Mr. Bradley, and other model engineers who use these methods, should be a sufficient answer.

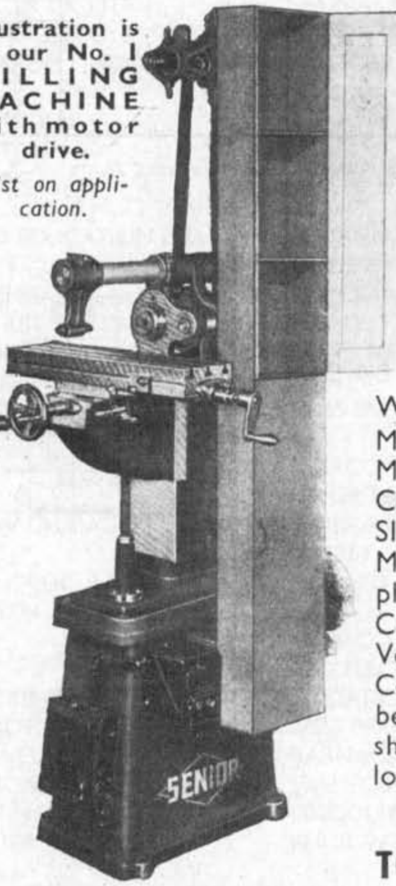

February 10 1955

A Double-purpose Sine Bar

By M. H.

To lay out any angle accurately is to most of us a formidable task, and the necessary equipment for such an operation usually costs more than we care to pay. Angles seem to crop up at the most inopportune times. We may wish to machine such things as dovetail slides, angular ways, etc., or even bore holes to an accuracy of centre distance usually associated with jig boring machines.

For such operations as these, a sine bar used in conjunction with a small attachment will be found to remove most of the headaches from the job.

A normal type of sine bar, if of sound manufacture, is quite simple to use because the centres of the rollers are accurate (see Fig. 1.) and the height of the packing can be found directly from published tables. The method of use is as follows: Assuming that we are using a 5 in. sine bar and we wish to set up an angle of 30 deg., the height of the packing is found by multiplying the length of the sine bar centre distance by the sine of the angle to be found. In this example, referring to Fig. 2, the height would be:

h = 5 x sin 30 deg. =2.500 in.

The sine bar about to be discribed here differs slightly from the normal type, and has been designed for home workshop manufacture. Naturally, unless we are skilled and have precision grinding machines available, it is difficult to match the precision of a commercially-made instrument, but this will cause no great inconvenience, apart from the fact that if the roller centre distance is not exactly 5.000 in., the simple calculation should be used instead of referring to standard sine bar tables. The drawing, Fig. 3, shows the construction of the sine bar. The parts (details 1 and 2) are made from ¾ in. x ½

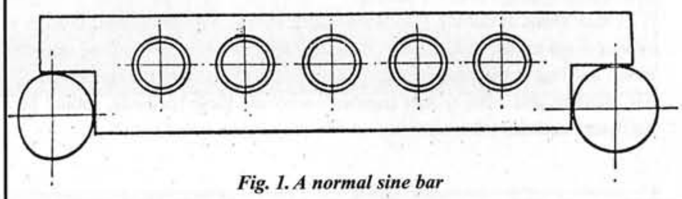

Fig. 1. A normal sine bar

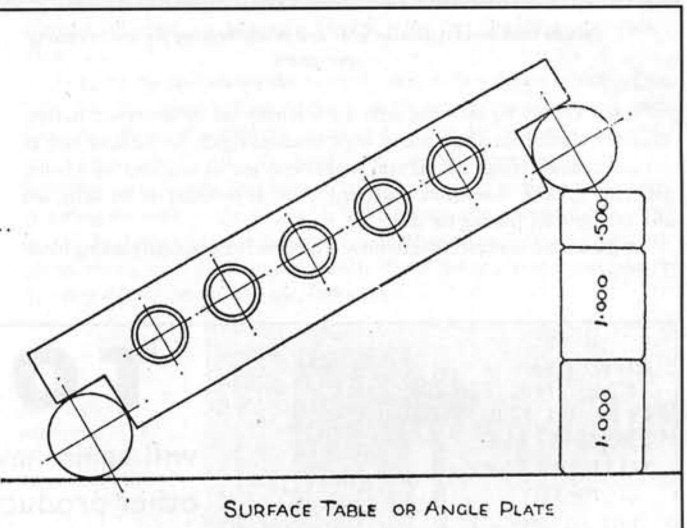

Right: Fig. 2. Setting up a sine bar to an angle of 30° with gauge blocks or "slips"

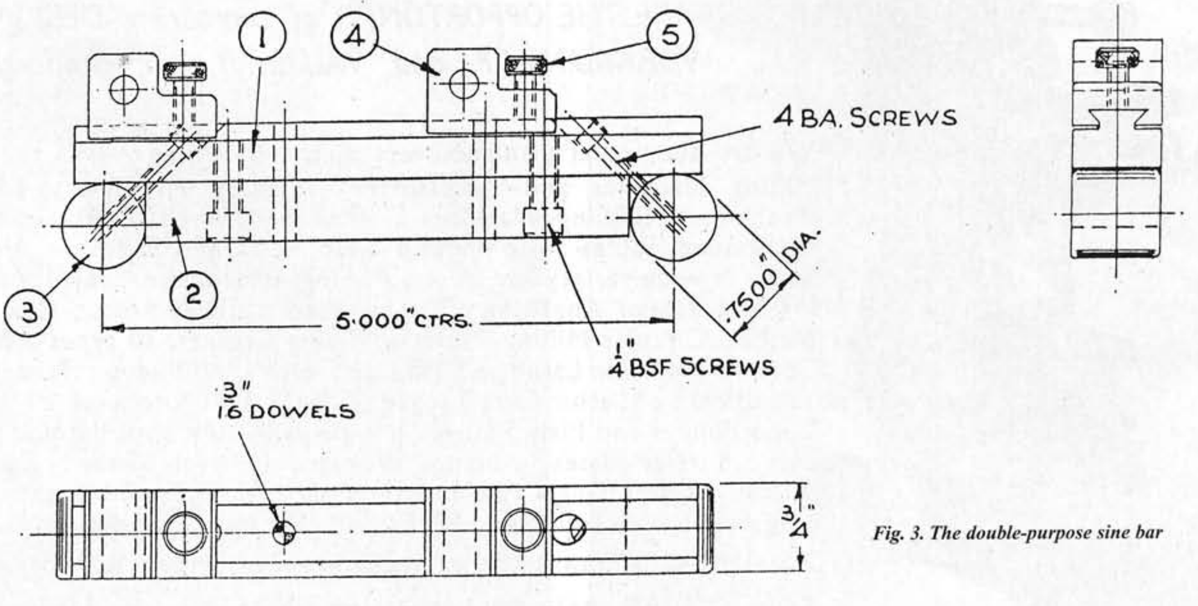

Fig. 3. The double-purpose sine bar

in. ground key-steel which is supplied ground to a tolerance of plus and minus 0.0005 in. Detail 1 is cut to a length of 5½ in. and the dovetail machined. This may be done by milling on the lathe and finish scraping. The dovetail should be as parallel as possible with the sides, but a slight error will not matter too much, as the mating part is drilled and reamed on assembly. Detail 2 should be machined to a length of 4.250 in. to as close a limit as possible. The ends should also be dead square with the sides. A convenient method of doing this is by setting up the piece on an angle-plate attached to the lathe faceplate and facing off with a sharp tool. To ensure a flat surface on the ends, drill in a small dimple with a centre drill – this will prevent any small pip forming due to the tool being slightly off centre.

Screw together the details 1 and 2 and then drill and ream $\frac{3}{16}$ in. diameter for the two dowels. The roller fixing-holes should next be drilled and counter-bored. Mark out and drill from the inside of the right-angle, and counter-bore to suit the screw head. The rollers (detail 3) are made from ⅞ in. diameter silver-steel, and should be turned to 0.750 in. diameter plus 0.0005 in. and lightly polished with a piece of worn-out emery cloth. Cut the two rollers to length and radius ends with a fine file. After carefully marking-out and lightly centre-punching, drill and tap the 4-B.A. holes, and fix to previously made body by steel head-screws.

We now have the basic sine bar, and can proceed with the attachment to be used for accurate hole spacing. This consists of the two sliding blocks (details 4) and should be made from a piece of ¾ in. square mild-steel sufficiently large enough for them both. Mill out the dovetail slot first, leaving it a little on the tight side for final fitting, and then cut out the lugs for the clamping-screws. Drill and tap 2 B.A., then countersink the first thread away from the bottom to prevent any burrs binding on the body. The blocks can now be sawn apart and generally cleaned up to a polished finish. At this stage, the final fitting of the dovetail can be done, to give a good sliding fit on the sine bar body.

The clamping-screws (details 5) are made from hard brass, and are screwed 2 B.A. and have their heads fine knurled. As an extra, small tommy bar holes can be drilled in, if required, but these should not be necessary if the fit of the dovetail is reasonable. The final operation is to drill and ream the ¼ in. diameter holes. Mount one of the blocks somewhere near the centre of the sine bar, and mark out the position of the hole and lightly centre-punch. The sine bar should then be set up on the faceplate, with the centre-punch mark running true, and the hole then drilled and reamed. Without disturbing the sine bar, remove the block and replace it with the other one, clamp it with its own screw, and make the hole as before. The final burrs can now be removed, and the instrument is ready for use.

With reasonable care, no trouble will be experienced with the sine bar, but it should be borne in mind that nothing has been hardened, and inaccuracies will creep in if the rollers are bruised.

In tool rooms, where sine bars are mostly used, the packing would be ground and lapped gauge blocks. A good set of gauge blocks or "slips" will give any combination of size within their range in increments of 0.0001 in. In our case, where no such refinement is likely, the packing can be ½ in. diameter mild-steel bar faced to the length required and dimpled on each end to prevent the pip forming. It is a good idea to make an initial set of these in standard sizes from 0.1 in. to 1 in. and rising in increments of 0.1000 in.: any odd sizes could then be turned up as they were required, and so gradually build up the set.

There are a number of companies that supply new or second-hand milling machines, shapers and accessories. The following companies advertise in Model Engineer and will be pleased to answer any queries.

New Machines:
CHESTER UK LTD
CLWYD CLOSE
HAWARDEN INDUSTRIAL
PARK
HAWARDEN
CHESTER
CH5 3PZ

EMCO EDUCATION LTD
UNIT 4
HAYLING BILLY BUSINESS
CENTRE
FURNESS WAY
HAYLING ISLAND
HANTS
PO11 OED

MAXNC
6730 W CHICAGO ST STE.
2&3
CHANDLER
AZ 85226
U.S.A.

MYFORD LTD
WILMOT LANE
CHILWELL ROAD
BEESTON
NOTTINGHAM
NG9 1ER

PAISLEY MACHINE TOOLS
SPARKS LANE
BROOK STREET
CUCKFIELD
SUSSEX
RH17 5JP

TENGA ENGINEERING CO
LTD
BRITANNIA HOUSE
QUEENSWAY
STEM LANE INDUSTRIAL
ESTATE
NEW MILTON
HANTS
BH25 5NN

WARCO
FISHER LANE
CHIDDINGFOLD
SURREY
GU8 4TD

WABECO MACHINE TOOLS
PRO MACHINE TOOLS LTD
17 STATION ROAD BUSINESS PARK
BARNACK
STAMFORD
LINCOLNSHIRE
PE9 3DW

Second-hand Machines:
R.A. ATKINS
HUNTS HILL HOUSE
HUNTS HILL
NORMANDY
GUILDFORD
SURREY

B.B.C. MACHINE TOOLS LTD
CARLUKE
STRATHCLYDE
SCOTLAND

EVENSON ENGINEERING
4 DUCHY CRESCENT
BRADFORD
BD9 5NJ

G & M TOOLS
THE MILL
MILL LANE
ASHINGTON
WEST SUSSEX
RH20 3BX

HOME & WORKSHOP
MACHINERY
144 MAIDSTONE ROAD
FOOTS CRAY
SIDCUP
KENT
DA14 5HS

LA SERVICES LTD
BRAMCOTE
WARWICKSHIRE

M.E. SALE & EXCHANGE
COMPASS HOUSE
HIGH STREET
ROTHERFIELD
SUSSEX

REJON MACHINE TOOLS
MUMBY LODGE
MUMBY'S DROVE
THREE HOLES
WISBECH
CAMBS
PE14 9JT

TOOLCO
TOOLCO HOUSE
PO BOX 165
STROUD
GLOUCS
GL6 7YQ

TRADE SALES DIRECT
168A LOWER REGENT
STREET
BEESTON
NOTTINGHAM
NG9 2DJ

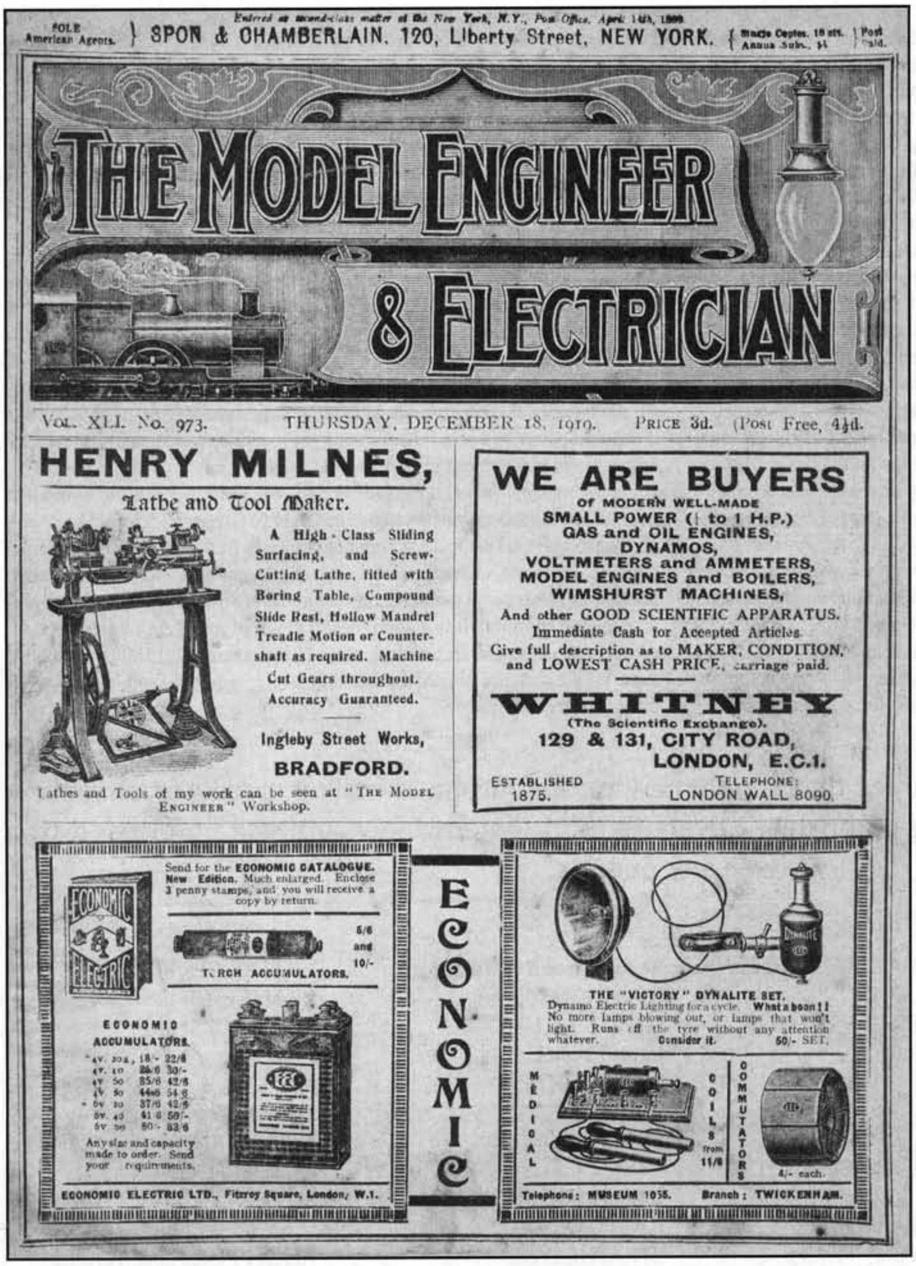

Entered as second-class matter at the New York, N.Y., Post Office, April 14th, 1899.

SOLE American Agents. } SPON & CHAMBERLAIN, 120, Liberty Street, NEW YORK. { Single Copies, 10 cts. Annual Subs., $4 } Post Paid.

THE MODEL ENGINEER & ELECTRICIAN

VOL. XLI. No. 973. THURSDAY, DECEMBER 18, 1919. PRICE 3d. (Post Free, 4½d.

HENRY MILNES,

Lathe and Tool Maker.

A High-Class Sliding Surfacing, and Screw-Cutting Lathe, fitted with Boring Table, Compound Slide Rest, Hollow Mandrel Treadle Motion or Counter-shaft as required. Machine Cut Gears throughout. Accuracy Guaranteed.

Ingleby Street Works,
BRADFORD.

Lathes and Tools of my work can be seen at "THE MODEL ENGINEER" Workshop.

WE ARE BUYERS

OF MODERN WELL-MADE
SMALL POWER (¼ to 1 H.P.)
GAS and OIL ENGINES,
DYNAMOS,
VOLTMETERS and AMMETERS,
MODEL ENGINES and BOILERS,
WIMSHURST MACHINES,

And other GOOD SCIENTIFIC APPARATUS.
Immediate Cash for Accepted Articles.
Give full description as to MAKER, CONDITION, and LOWEST CASH PRICE, carriage paid.

WHITNEY
(The Scientific Exchange).
129 & 131, CITY ROAD,
LONDON, E.C.1.

ESTABLISHED 1875.
TELEPHONE: LONDON WALL 8090.

Send for the **ECONOMIC CATALOGUE. New Edition.** Much enlarged. Enclose 3 penny stamps, and you will receive a copy by return.

TORCH ACCUMULATORS. 5/6 and 10/-

ECONOMIC ACCUMULATORS.

4v.	20a.,	18/-	22/6
4v.	40	26/6	30/-
4v	60	35/6	42/6
4v	80	44/6	54/6
6v	20	37/6	42/6
6v.	40	41/6	50/-
6v	60	60/-	83/6

Any size and capacity made to order. Send your requirements.

ECONOMIC ELECTRIC LTD., Fitzroy Square, London, W.1.

ECONOMIC

THE "VICTORY" DYNALITE SET.
Dynamo Electric Lighting for a cycle. **What a boon!!** No more lamps blowing out, or lamps that won't light. Runs off the tyre without any attention whatever. **Consider it.** 50/- SET.

MEDICAL COILS from 11/6

COMMUTATORS 4/- each.

Telephone: MUSEUM 1055. Branch: TWICKENHAM.

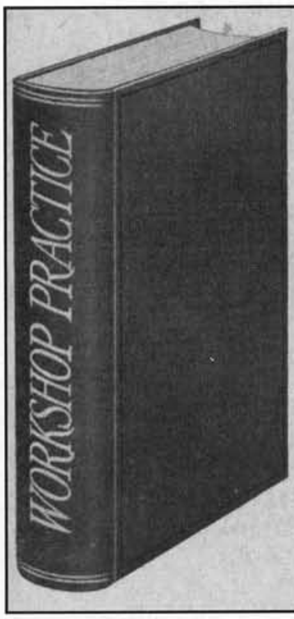

E. PULL'S

Modern Workshop Practice

By F. JOHNSTONE TAYLOR (1940 edition)

780 PAGES. 542 ILLUSTRATIONS

This complete compendium of practical teaching on Modern Workshop Practice contains trade knowledge indispensable for Engineers, Apprentices, Improvers, and all engaged in Engineering Trades.

FREE APPROVAL is the Best Test of Value

LIST OF THE CONTENTS

MEASUREMENTS AND MEASURING MACHINES
MEASURING TOOLS
GAUGES AND GAUGE SYSTEMS
COMMON WORKSHOP TOOLS
BENCH WORK
MATERIALS:—CAST IRON
HEAT TREATMENT OF METALS
SOLDERING, BRAZING, AND LACQUERING
LATHES
TOOL HOLDERS
LATHE-TOOLS, SPEEDS AND FEEDS
LATHE ACCESSORIES
TURNING
SCREWS AND SCREW CUTTING
TURRET LATHES
CAPSTAN AND TURRET LATHE TOOLS
PLAIN AND UNIVERSAL MILLING
GEAR AND GEAR CUTTING
GEAR HOBBING AND PLANING MACHINES
BORING AND SLOTTING MACHINES
PLANING, SHAPING, AND DRILLING
PLAIN AND UNIVERSAL GRINDING
FORGE TOOLS AND PROCESSES
WELDING
SPECIAL GRINDERS: FIVE MACHINES
THE ENGINEER'S SQUARE: THREE TYPES OF STEEL SQUARES AND A COMBINATION SQUARE DESCRIBED
TESTING A TRY-SQUARE
TABLES (Measures, Rules, etc.)
INDEX OF 2,000 ITEMS

FREE EXAMINATION FORM NO CHARGE AND NO OBLIGATION TO ORDER.

To VIRTUE & CO., LTD., M.E. Dept., Crown Chambers, Upper Parliament Street, Nottingham.

Please send me "MODERN WORKSHOP PRACTICE." Price 17s. 6d. I will return it in one week, or send you 3s. 6d. deposit, and the balance by monthly payments of 3s. 6d. (Cash Price 16s. 6d.)

Signature ....
Address ....
"M.E." *Occupation* ....

BOILERS.

LOCOMOTIVE, VERTICAL, HORIZONTAL, LAUNCH TYPES in Steel or Copper from 2 ins. diameter to 30 ins., and to 150 lbs. working pressure. Plates supplied Cut, Rolled, Flanged, and Drilled. Price List, **1d.** stamp.

T. GOODHAND,
37, Paget Street, New Brompton, Kent.

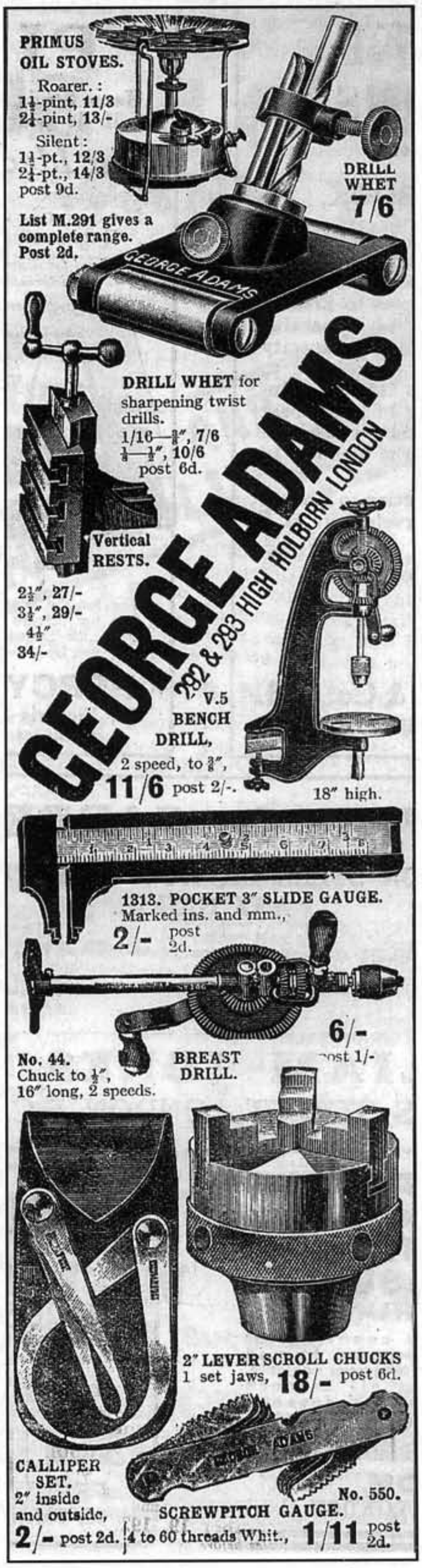

GEORGE ADAMS
282 & 283 HIGH HOLBORN LONDON

PRIMUS OIL STOVES.
Roarer.: 1½-pint, 11/3; 2½-pint, 13/-
Silent: 1½-pt., 12/3; 2½-pt., 14/3; post 9d.
List M.291 gives a complete range. Post 2d.

DRILL WHET 7/6

DRILL WHET for sharpening twist drills. 1/16—⅜", 7/6; ⅛—½", 10/6 post 6d.

Vertical RESTS. 2½", 27/-; 3½", 29/-; 4½" 34/-

V.5 BENCH DRILL, 2 speed, to ⅜", **11/6** post 2/-. 18" high.

1313. POCKET 3" SLIDE GAUGE. Marked ins. and mm., **2/-** post 2d.

No. 44. Chuck to ½", 16" long, 2 speeds. **BREAST DRILL.** **6/-** post 1/-

2" LEVER SCROLL CHUCKS 1 set jaws, **18/-** post 6d.

CALLIPER SET. 2" inside and outside, **2/-** post 2d.

No. 550. SCREWPITCH GAUGE. 4 to 60 threads Whit., **1/11** post 2d.

HOME AND WORKSHOP MACHINERY

QUALITY USED MACHINE TOOLS

144 Maidstone Road, Footscray, Sidcup, Kent, DA14 5HS.
Telephone 0181-300 9070 – Evenings 01959 532199 – Facsimile 0181-309 6311.
Opening Times: Monday-Friday 9am-5.30pm – Saturday Morning 9am-1pm
10 minutes from M25 – Junction 3 and South Circular – A205
See you at the International Model Show, Stands B33, B35, B37, B39, B41 on 8th-12th December 1999 at Alexandra Palace

LIMITED OFFER!
ALL MYFORDS DELIVERED *FREE* UK MAINLAND

LATHES

ACE 4½" x 20", gearbox, power slides, 3/4 jaw chucks, steadies, collets, stand	£750
BOXFORD TUD 4½" x 20" 3 jaw chuck, cabinet stand, hand feeds	£395
BOXFORD CUD 4½" x 20" model CUD, changewheels, 3 jaw chuck, cab. stand	£750
BOXFORD MODEL A 4½" x 22", gearbox, power cross feed, 3 jaw chuck, cabinet stand	£750
BOXFORD CUD 5" x 22" MkIII, c/wheels, 4 way toolpost	As New £1,400
BOXFORD BUD 5" x 22" MKIII, c/wheels, power cross feed, T slotted cross slide	£1,400
BOXFORD ST 10.10 5" x 20", geared head, power slides, 3/4 jaw chucks, coolant, hardly used	£2,450
BOXFORD 240 TCL CNC, lathe excellent, needs computer attention,	£1,250
COLCHESTER BANTAM 1600 model, 5" x 20", geared head, power feeds, gearbox	£1,400
COLCHESTER STUDENT 6" x 24", square head, gap bed, gearbox, power slides, ainjest screw cutting attachment	£2,250
COLCHESTER BANTAM 2000 Geared head, gearbox, 3/4 jaw chucks, Dickson tool post, gap bed coolant	£3,450
COLCHESTER STUDENT 6" x 24", geared head, gap bed, power cross feed, 4 way tool post	£950
COLCHESTER STUDENT 1800, 6½" x 40" models, 3/4 jaw chucks	As is £2,450
COILCHESTER MASTER 2500 6½" x 25", 16 speeds - 30 to 2500 fully geared, 3/4 jaw chucks, dual dials, gap bed, very clean	£3,450
COLCHESTER TRIUMPH 2000 7½" x 50", 16 speeds - 25 to 2000, fully geared, 3/4 jaw chucks, capstan unit, dual dials, gap beg, tooling	£3,450
EMCO V10P 5" x 24", geared head, gearbox, power cross feed, 3 jaw chuck, collets Dickson post, cabinet stand, green	£1400
HARRISON L5, 4½" x 24", fully tooled, complete with clutch	£950
HARRISON L6, 6" x 24", geared head, gearbox, excellent toolroom machine. Choice 6	From £950
HARRISON 140, 5½" x 24", 3 jaw chuck, gap bed, power feeds, clutch	£1,400
HARRISON M250, 5" x 30", 3 jaw chuck, in excellent condition	£3,450
HARRISON M300 6" x 24" geared head, gearbox, 3/4 jaw chucks	choice £2,450/£2,650
HARRISON 155 6½" x 25" precision lathe, fully geared, well equipped	£1,850
HOBBYMAT Lathe 2½" x 12" complete	choice, just in £450
KERRY AG2 5½" x 24", geared head, gearbox, 3 jaw chuck,	£850
MYFORD ML7 3½" x 19", changewheels, 3 jaw chuck, we have a large selection of this popular model	From £725
MYFORD ML7B 3½" x 19", gearbox, 3 jaw chuck etc.	£1,250
MYFORD ML7 3½" x 31", changewheels, 3 jaw chuck	£1,125
MYFORD ML7R 3½" x 19", clutch, 3 jaw chuck, stand, coolant, tooling	£2,250
MYFORD SUPER 7 3½" x 19", changewheels, 3 jaw chuck,	Choice £950-£1,150
MYFORD SUPER 7B 3½" x 19", gearbox, 3 jaw chuck	£1,250
MYFORD SUPER 7 3½" x 31", changewheels, 3 jaw chuck	Choice £1,400
MYFORD SUPER 7, 3½" x 19", 3 jaw chuck, power cross-feed, late model.	Choice
MYFORD SUPER 7B, 3½" x 19", gearbox, 3 jaw chuck, cabinet industrial stand, **Power cross-feed**, late machine	£2,450
MYFORD SUPER 7B, 3½" x 19", gearbox, **Power Cross Feed**, cabinet stand, tooling	£2,750
MYFORD SUPER 7B, 3½" x 19", gearbox, **Power Cross Feed**, cabinet stand	£2,950
MYFORD SUPER 7B 3½" x 31", gearbox, cabinet stand	Just £1,500
MYFORD SUPER 7B 3½" x 31", gearbox, power cross feed, 3/4 jaw chucks, travelling steady, cabinet stand, coolant, tray and blocks	£3,250
MYFORD MINIKOP Lathe	Just in £750
SMART & BROWN 2nd operation lathe, 3 jaw chuck, x-y slides, tailstock, stand	**Just £300**
SOUTHBEND 4½" x 24", c/wheels,3 jaw etc	£400
VICEROY TDS 1 GBL 5" x 20", gearbox, power slides, 3 morse tailstock	£1,250
VICEROY TDS 2 GBL 5" x 36", gearbox, power slides, 3 morse tailstock	£1,400

TOO MANY LATHES TO LIST!!

MILLING MACHINES

V – Vertical, H – Horizontal

ADCOCK AND SHIPLEY 1ES, Horizontal prec. machine, table 30" x 8" (powered), coolant	Just £495
ASTRA L4 Horizontal/vertical 1" arbor, 2 morse taper swivel head, cabinet stand	£950
CENTEC 2A horizontal, table 16" x 4¼", 1" arbor cabinet stand	£425
CENTEC 2B Horizontal, 1" arbor, table powered, 3 ph motor, single phase main motor	£725
CENTEC 2B H/V, vertical head, 2 morse taper/swivel, cabinet stand	£1,400
ELGAR EMTOC H/V H-30INT, V-2 morse taper, table 24" x 6" powered, coolant, pedestal stand	Just £1,250
ELLIOT U1 Horizontal milling machine	as is for £375
EMCO MENTOR, V, 2 morse taper/swivel head, table 20½" x 6"	Now just £725
EMCO (Made in Austria) FB2 vertical 6 speed 2 morse quill feed head complete with power feed to table	£2,250
HARRISON horizontal, 31" x 8" powered table	Very clean £650
HOBBYMAT BFE65 Vertical geared head, 1 Morse taper, table 18" x 6"	£650
L.W. A2F Vertical turret mill, 27½" x 7" (powered) table, R8 quill head, speeds 183-2840, one shot lube, 1980	£2,250
MYFORD VMC vertical turret type mill complete with clamping kit	£2,250
MYFORD VME vertical turret mill	As New £2,100
RISHTON VM60 bench machine, table 24" x 6", geared 6 speed head Clarkson chuck & vice	£2,200
RISHTON complete with powered table and cabinet stand	£2,450
TOM SENIOR MODEL E vertical, cabinet stand, 25" x 43/4", travel 15"+, 2 morse quill head.	£2,650
TOM SENIOR M1 horizontal, 25" x 6" powered table, 1" arbor	£575
TOM SENIOR M1 V/H, 25" x 6", 2 morse taper, 1" arbor.	Selection £1,200 – £1,450
TOM SENIOR TYPE S vertical turret type, mill, coolant, extremely nice	£2,250
TOM SENIOR UNIVERSAL, powered 31" x 6½" swivel table, vertical 2 morse taper head, horizontal 30 INT arbor, coolant	as new £2,750
TOS FO3 AV vertical turret mill, 40 INT, 54" x 10" table, power all-ways	£2,250
ZENITA vertical turret type (loads of room spindle to table) 3 morse	As is £350

DRILLS

ASTRA Precision bench drill	£125
FOBCO ½" Bench, Tilting Table	£325
FOBCO ½" Pedestal Drill Tiling table	£345
MEDDINGS ½" pedestal drill	£245
MEDDINGS 2 Morse taper pedestal drills	Choice £275
POLLARD CORONA Pedestal ½"/1 Morse	From £100
STARTRITE MERCURY ½" 4 speed bench drill	£225
STARTRITE Mercury ½" pedestal drill, low volt light, 240 volts	£300

GRINDING / BUFFING

CLARKSON MKI Tool and Cutter Grinder	£550
EAGLE Model 2 surface grinders, mag. chucks	Choice £750
EAGLE MODEL 4W MKII 24" x 6" table with 14" x 6" magnetic chuck + dust extractor	£1,150
I.D.P. Trimtool cutter grinder	£250
MILFORD 12" Pedestal Grinder	£325
PINNACLE MODEL 450A Tool and Cutter Grinder (current model) capacity, 8¼"x16" 1986	£1,275
VICEROY Grinder, pedestal model	£145
VICEROY Buffers, pedestal models	Each £145

MISCELLANEOUS /FABRICATION MCH.

BURNERED Collet chuck + 12 collets to fit r/head Colchester Student	£295
BANTAM D13	£295
BURNERED GRIPTRU 3 jaw chuck + e/jaws, 5" D13	£150
BURNERED GRIPTRU As Above for Myfords	£150
PULTRA Lathe compound slide only	Late Type £250
RAGLAN Tailstock 5" c/height	Hardly Used £245
BOXFORD V/Slide type	Very Nice £225
NORTON/EDWARDS Arbor presses	Each £145
GRIND ALL No.1 3" fixture	Boxed £145
RODNEY (LG) TYPE ML7/SUPER milling attachment	£375
CROMPTON Polisher, 2hp bench tupe	£165
WELLSAW 4" Hacksaw	Very Clean £375
AJAX 6" Hacksaw	£425
AJAX 10" Hacksaw	Choice £650
SURFACE plates from 12" x 12" to 36" x 36"	Very Nice from £30
SURFACE plates, granite, 2ft x 2ft/18" x 18"	each £125
KEETONA 4ft treadle guillotine 16g	£750
KEETONA 4ft treadle folder 16g	£750
VICEROY coke forge, chimney type	£425
ACORN 7" bench shaper on stand	£345
LITTONS old 3 Morse taper drill	£125
ECLIPSE de-magnetiser	£45
NORTON No.6 deep throat flypress on stand + tooling	£625
HYDROVANE 43 PU + dryer	£850
5½" L-W chuck comp. Toledo USA d/head	£145
ESSEX tapping machine, late model	£145
RIVETER, pedestal foot operated (hollow type rivets)	£145
VERSATOOL tool cabinet (similar to Bridgport type) 59" x 20" x 42" high	£175
RJH 2hp 6" vertical linisher + built in dust extractor, low volt light	£725
VICEROY TDS 8" pedestal grinder, 240 volts	£175
FLAMEFAST brazing hearth (good condition) 240 volts	£140
RJH buffer 1hp, low volt light, excellent condition	£400
KASENIT oven / natural gas / door up and over	£345
ALCOSA GF131 ceramic chip heath, natural gas, 240 volts	£375
ELLIOT 14S, 14" shaping machine	£650
ALBA 1A, 10" shaping machine	From £250
TES, BOXFORD / MYFORD quick change tool posts	British/New £75
QUASIARC 300amp welder on wheels	Just £125
KINGSLAND 4ft/16g Fibricated guillotine	£750
DENBIGH NO.5 Flypress complete + stand	£375
ESSEX Tapping machine	£125
WEBER 1½ ton mobile garage crane, late blue colour	£495
VANCO 1" belt sander, bench model	£225
UNION 4½" x 30" bench centres	£175
CLARKSON 40INT collet chucks	Each £100
HARRISON L5 Vertical Slide	Never used £345
HARRISON L5 Boring Table	£165
CENTEC VERTICAL QUILL feed heads	Each £750
BCA MKIII stand	Just £140
POTTER'S WHEELS foot or 240 volts operated	£100 / £300
ELLIOTT 1250 STURDIMILL vertical head	One off (rare) £525
RJH linisher 4" wide belt, pedestal	£345
DENBIGH/NORTON No.2/3 Flypress	From £145
JONES AND SHIPMAN/ SEDGEWICK Arbor presses	From £140
STEEL STOCK Just arrived – to callers only	
ELLIOT SAMSON 3R5/KEETONA 13 Hand shears and stands	£85 / £75
JONES AND SHIPMAN rotary table, 12" still crated, horizontal/vertical	£550
ELLIOT 10' rotary table	Choice £250
BRIDGEPORT No.1/No.2 Boring Heads	£145 / £175
ELLIOT U1/U2 Slotting Head	£475
SWAGE BLOCKS	£125 / £145
PVE NO.2 Co-ordinate table, 13" x 12"	£425
J&S Universal Grinding Vice	Choice £275 / £325
BOX TABLES: Grade A and B, many sizes	£40 - £150
SINE TABLES, New Selection, just in	Each £275
SLIPS/GAUGES Metric/Imperial, New Sets; 87/81 piece	£215 / £145
HORIZONTAL METAL BANDSAW 6" x 4½" capacity	New £170
MEDDINGS Fretsaw, 24" throat	Choice from £350
RAPID Chipper Hopper	£325
KASNET Mini Furnace	Each £175
COLCHESTER STUDENT/MASTER Round head, faceplates,small/large	£50 / £80
ROTARY TABLE, 6" Horizontal/Vertical	New – Now just £150
ROTARY TABLE, 8" Horizontal/Vertical	New – Now just £245
ROTARY TABLE, 10" Horizontal/Vertical	New – Now just £295
QUALTERS AND SMITH 6" Hacksaw	£345
VEHICLE MOUNTED CRANES/Epco Electric up-swing round 1 ton	From £375
FORGE DS130 Ceramic Chip Type	£350
BORING HEADS 2/3 Morse, R8 Taper, Max. Cap 4½"	New, each £90
ANVIL, 1cwt on stand	£125
ODONI Machine Bed Clamps (pair)	Special £24.50
HEIGHT GAUGES by Chesterman, Shardlow, Moore and Wright	From £95
ELLIOTT 10M Shaper, 10" stroke	£325
ELLIOTT 5" Universal Dividing Head and Tailstock	£325
SMART AND BROWN H3/H5 Toggle Press	£145 / £165
DIE Boxes	From £45
TRANSWAVE 3HP Converter	New £300
TRANSWAVE 5HP Converter	New £375
TRANSWAVE MMC rotary converters now available	From £455
CROMPTON PARKINSON ¾ HP, resillient mount, Boxford/Myford Super 7 Type motor,	New £135
DEWHURST TYPE A Reversing Switch,	New £49

WOODWORKING

DCE Dust Extractor + DCE dryer	Very Nice £495

JUST IN !! WE HAVE A NICE SELECTION OF COLCHESTER LATHES INCLUDING CHIPMASTER, BANTAM, STUDENT, MASTER AND TRIUMPH 2000

LARGE SELECTION OF MACHINE TOOLS AND MEASURING EQUIPMENT FAR TOO MUCH TO LIST AVAILABLE.
PLEASE RING US WITH YOUR REQUIREMENTS. WE WILL BE PLEASED TO HEAR FROM YOU.
DISTANCE NO PROBLEM!! ALL PRICES EXCLUSIVE OF V.A.T.

SEE US AT AT ALLY PALLY 8-12 DEC

CALLERS WELCOME!!

TRADE ENQUIRIES WELCOME

CHRONOS
LIMITED

ALL PRICES INC. VAT & POSTAGE U.K. MAINLAND

OUR 84 PAGE TOOL CATALOGUE IS NOW FREE – WRITE OR PHONE FOR YOUR COPY!!

SET OF 8 HSS LATHE TOOLS 6mm

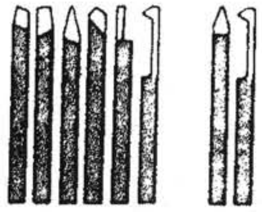

Code XI5O • **£20.00**

INDEXABLE TIPPED BORING TOOLS C/W SANDVIK TIP

CODE	SHANK(h)	LENGTH	PRICE
IBM5	8.5MM	128MM	£18.00
IBM6	10.5MM	150MM	£19.00
IBM7	13.5MM	165MM	£20.00
IBM8	16.5MM	200MM	£21.00
IBM9	22MM	220MM	£25.00

SPARE TIPS £3.50 EACH

CHRONOS
LIMITED
ENGINEERING SUPPLIES
CATALOGUE No 34
FEB 1999

INDEXABLE END MILLS

These indexable endmills come complete with top quality tips.

Code	Head Dia	Shank Dia	Tips	Price
IMH1	32mm	20mm	2	£23.00
IMH2	40mm	20mm	3	£29.00
IMH5	Spare Tips (each)			£3.50

NEW HSS BORING TOOLS

CODE	SIZE	PRICE
HSF14	¼	£6.00
HSF516	5/16	£6.00
HSF3/8	⅜	£6.00

ALL PRICES INCLUDE VAT AND CARRIAGE UK MAINLAND

DRILL SET
1-6mm x 0.01mm
50pc HSS
PRECISION GROUND
Code XI07
£19.50
inc

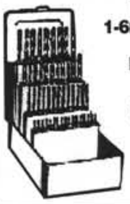

SET OF 4 CENTRE DRILLS

Code CDS • **£4.95**

SET OF BA TAPS & DIES

0, 2, 4, 6, 8, 10 BA CARBON • Code XI

2 Taps
1 Die
Each Size
& Holders
£29.95

NEW 5 PC SET OF 1/4 SQUARE INDEXABLE LATHE TOOLS

FULLY GUARANTEED **CODE 2521400** **PRICE £24.95**

TCT LATHE TOOLS – BRITISH MADE AVAILABLE 1/4 5/16 OR 3/8 SHANK (PLEASE STATE)

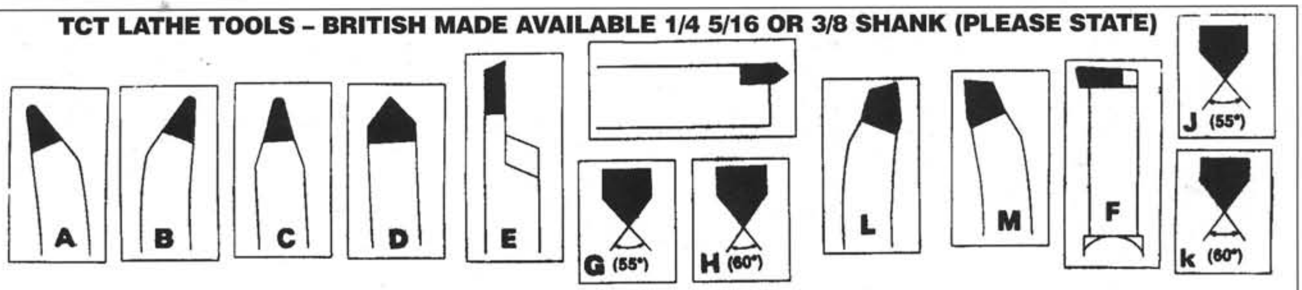

Type A - Left hand Facing Tool	£3.65	Type G - Ex Threading Tool 55 deg	£3.65	Type F - Boring Tool	£5.60
Type B - Right hand Facing Tool	£3.65	Type H - Ext Threading Tool 60deg	£3.65	Type J 55' INT Threading	£5.60
Type C - Round nose Profiling Tool	£3.65	Type L - Right hand bar Tuning Tool	£3.65	Type K 60' INT Threading	£5.60
Type D - Roughing Tool	£3.65	Type M - Left hand bar Tuning Tool	£3.65		
Type E - Parting Tool	£3.65				

Special Offer any six of the above tools (ABCDEGHLM) for £19.50

NEW F TYPE BORING TOOL
3/16 SQ FOR SMALL JOBS – £5.60!!

CHRONOS LTD

UNIT 8 EXECUTIVE PARK 229/231 HATFIELD ROAD (behind Executive Motors), ST ALBANS, HERTS AL1 4TA
TEL (01727) 832793 MOBILE 0797 4353185 FAX (01727) 848130 Email sales@chronos.ltd.uk