thermostat might be made to control the blowlamp nipple. The exact arrangement of control gear must be left to individual requirements, but the main point about the devices considered here is that they are positive enough to operate direct on the controls, without the use of relay mechanism.

The use of a separate steam driven feed pump may be considered undesirable on the grounds of complication, but the scheme has some attractions, and if used, the thermostat could control the steam throttle of the pump direct. As in the previous case, the pump must be capable of delivering more water than is ever required, and there must be no possibility of it ever stopping 'on dead centre' when throttled down.

Time Lag.

In all control devices, a certain interval of time must necessarily elapse between cause and effect, and there is a possibility that in a flash boiler there might be set up a sequence of conditions which would lead to surging. The only way to avoid this is to keep the time lag as small as possible, by arranging that the heat acts as quickly and directly on the element as possible, and that the latter has the minimum inertia, both in the mechanical sense, and in its reaction to increase of temperature.

Another Method of Temperature Control.

If one uses a separate feed pump with its own steam cylinder, there is another, and in some respects, simpler method of control which dispenses with the need for a thermostat.

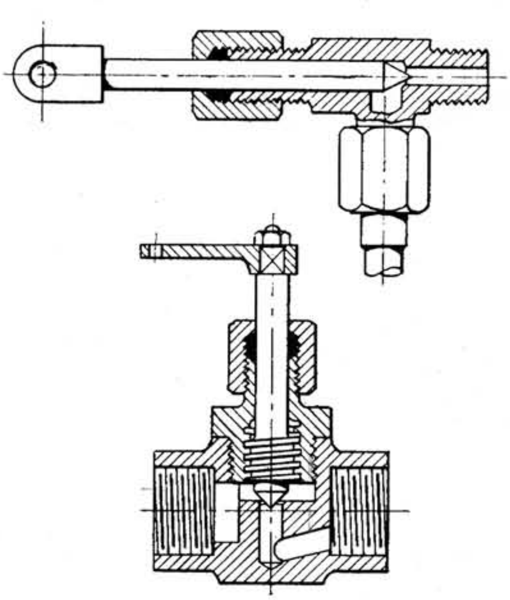

Fig. 4. A direct controlled pin valve, and a quick-thread screw down valve, for thermostat operation.

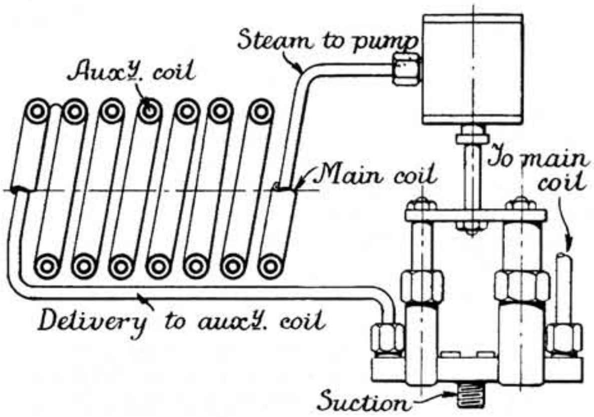

Fig. 5. A seperate feed pump system for maintaining constant temperature.

I have not tried this out, but feel sure that the principle is sound; I fully believed that it was original until I talked it over with another model engineer, and found that he had a precisely similar idea! I will refrain from the obvious remark about "great minds....."

Briefly, the idea is to provide the feed pump with its own boiler, which would consist of a coil of tubing actually inside or in metallic contact with the hot end of the main boiler, and obtaining all its heat from the latter. This auxiliary boiler shown in Fig 5, would also have an independent feed pump, operated from the main feed pump motion, and suitably adjusted to the requirements of the boiler, with no bypass or other device to vary its output.

It will be clear that the hotter the main boiler becomes, the more steam will be generated in the auxiliary boiler, and in consequence, the feed pump will run faster and deliver more water, thus the main boiler temperature will be reduced, and the system becomes self-compensating. The small boiler will also serve the purpose of taking the 'bite' out of highly superheated steam, an expedient very often resorted to in steam car practice.

The additional weight and complication of the auxiliary boiler and donkey pump involved in the use of this system may be considered undesirable, but I do not think it would be too big a price to pay for complete reliability. Experiment would, of course, be required to arrive at the best proportions of the various elements in the system.

There are, no doubt, other methods of thermal control which could be adopted, and I had intended to investigate the matter more deeply before writing on this subject, as my experiments are in no sense complete; but time flies, and some correspondents who wish to get busy on the construction of plants have tackled me for hints on this very vital problem.

While perhaps I have not been able to describe "how to make and fit a simple thermostat" in the literal and simple way that some readers would wish, I have least indicated three distinct methods which promise practical possibilities.

January 9, 1936

Correct Details in Engineering Models.

By R. J. Davey.

THE appearance of a model depends very much on careful attention to detail, and its correctness as to date of prototype. Many otherwise good jobs are spoiled by the addition of parts of detail, quite out of date with the type or period.

The writer has frequently received enquiries as to correct type of such parts as connecting rods, which have probably appeared at sometime in old numbers of this magazine, but are not to hand, or available now. It is to assist these, and many new readers who are probably also interested, that this article is intended.

Simple instructions are also supplied for overcoming the difficult process of slot cutting for cotters. At least, this part of the job appears difficult, but after one or two trials, the cutting of quite small slots becomes quite a simple job. Don't get tired of that engine job, have some other hobby for an occa-

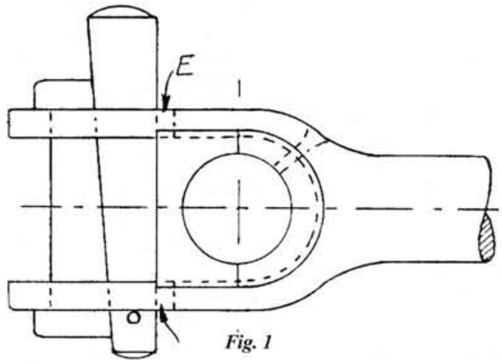

Fig. 1

sional change, and interest in doing good work will return. Patience is a great asset in model work.

Fig.1 shows a gib and cotter connecting rod end used in quite early types of steam engines. This was generally used for rods working in vertical positions, on old beam engines, table engines and the like. A similar rod end was used on "Bell's Comet" marine engine of 1811. It will be noticed that this end, Fig 1, is an 'open' fork end, it is prevented from spreading out, however, by the gib, which has lugs or horns fitting over the strap as shown in similar design in sectional drawing, Fig. 4. The cotter or wedge in this type, as also in Fig.2, were always made a tight fit sideways, the object being to prevent the cotter working back, a split pin was also fitted at end to stop cotter coming out entirely. Only a small amount of taper was used on these, about ½ inch per foot usually. The end shown in Fig. 2 was mostly made the top end.

The brasses of bottom fork end had flanged sides fitting the fork as shown. Top end brasses were without flanges, and just a plain cotter to take up wear, with pin hole at end; sometimes a set screw was fitted to bear on cotter as extra security. Sufficient space (as shown by dotted line) called draught, was left for taking up; this is indicated in each figure by letters E and F. The reason for not having flanges on top brasses is that they came up to a flanged journal or bearing, and were then held in place by a large washer with set screw in centre of journal. These top end brasses were shaped and fitted as shown, with a space left for taking up wear without having to take the rod down. Lubricators were not often fitted on early engines in such details as this; just a plain oil hole was drilled in the most suitable place.

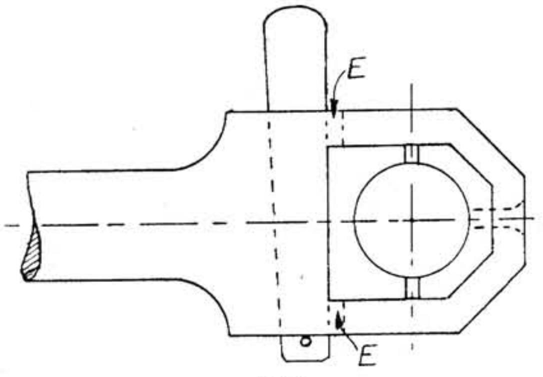

Fig. 2

A type of rod end often used in place of Fig.2 is that shown in Fig. 3. The bottom half was tapped to take square head bolts inserted in clearing holes in top half, and locked with a nut on under side. These bolts were just black hand forged bolts, the clearance in bolt holes in top half allowing same to accommodate itself accurately to bearing journal.

Fig. 4 shows in section a rod end of a later date; there are still many of this type in existence, but it is unfortunately scarcely made now. This is the strap end type; the brasses are drawn together by gib and cotter in nearly the same manner as previous types, except that a strap encloses the brasses first, and then fits over the rod end, this strap drawing brasses A up to rod end B by means of wedge C and gib D. Sufficient draught is left at E and F to take up wear when required. Actually, slots in strap and rod are of the same size, but slot in rod is advanced by the amount of draught required for taking up; this is shown clearly in drawing. The cotter is secured by set screw at side.

Fig. 5 is another similar type of rod end, but gib has a screwed extension passing through an eye formed with cotter, with nuts each side of eye for adjusting cotter. This type has a very neat appearance if nicely fitted and proportioned.

Sometimes two gibs were fitted, with cotter in centre, as shown in Fig. 6, the taper being on both sides of cotter; this double gib was also much used on open type fork ends, particularly on side lever engines.

Fig 7. shows a later type of strap connecting rod end; the strap is held by bolts as shown, brasses being closed by cotter. This cotter is secured by set screws at top and bottom and split pin hole at end.

Fig 8. shows a common type of connecting rod end, used on land and marine work. This is a simple type to fit, and if correctly detailed, has a very massive appearance on larger scale models.

It is not proposed to show any up-to-date types, as plenty of details of these are available in the pages of present day journals.

In fitting up connecting rods of the gib and cotter type, the most difficult

Fig. 3

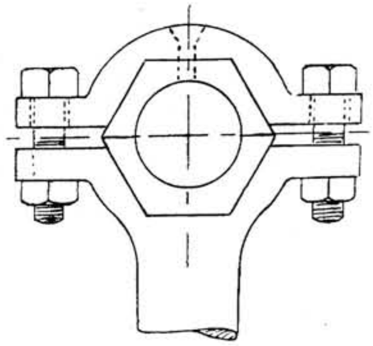

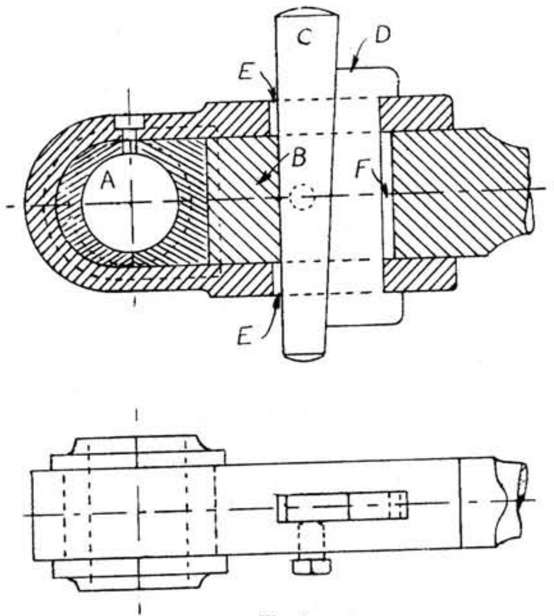

Fig. 4

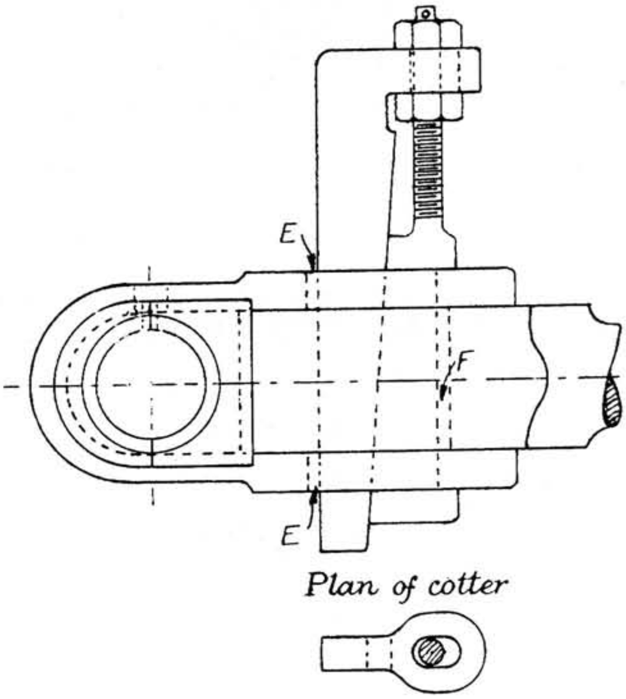

Fig. 5

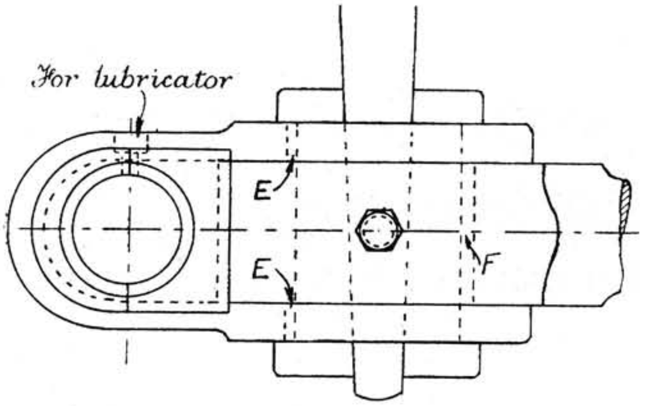

Fig. 6

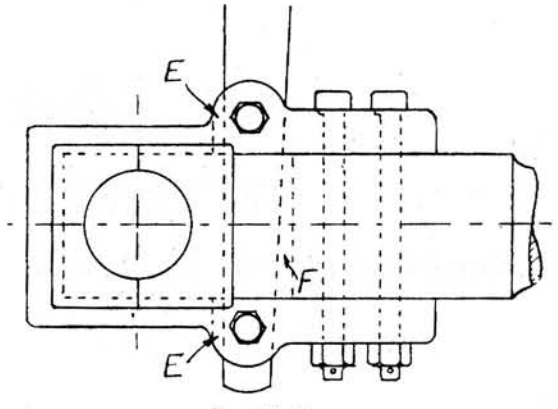

Fig. 7

Fig. 9

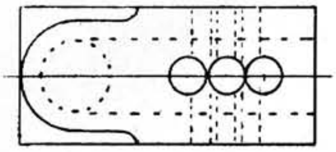

Fig. 9a

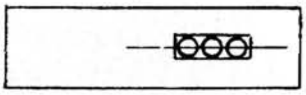

Fig. 11

Fig. 10

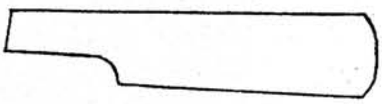

part is cutting the slots. The average amateur is often hampered by the lack of a good high speed accurate drill, and speed is a great asset with the small size drills needed on this job.

Accuracy in drilling in the first place, is the main line to success, and easy cutting of slot. Failing access to a high speed drilling machine, use a drill in the lathe, running it as high speed as possible; get someone to pedal for you, and drill against a plate pad in poppet.

Suppose it is a strap end like Fig. 4 or 5, for example. In small sizes, the strap would be made from a solid block of mild steel, as Fig 9. and 9a. Proceed to file up a piece of suitable size, true and square on all sides; ends do not matter. Colour with copper sulphate solution, and mark off as shown by dotted lines in both sketches. Before drilling for slot, drill a few slightly larger holes than is required for slot, at centre of block, as side view Fig. 9; this is to allow clearance for punch or drift, so that it need only be hammered in about half way, from each side successively. For slot, drill a succession of holes as close together as possible, see top side view Fig 9a; drill from each side to centre clearing holes previously mentioned.

For cutting slot, a very good tool can be made from a broken machine saw blade; these can be obtained from 1/16 inch up to 3/16 thick. Break a piece off about 3 inches long, and grind to shape as shown in sketch Fig.10. This will be found to answer the purpose better than anything else, and with an occasional grind across end to sharpen edges, will last for quite a number of slots. Two might be made, one say about two-thirds of finished length of slot and one nearly up to finished size; just leave enough for a finish drift, see Fig. 11 or for file finish. Failing a piece of saw blade, make a tool from spring steel, filing up to shape and tempering in exactly the same way as for ordinary cast steel, but first quenching in oil instead of water. In using the drift, see that job is held tight and square in vice jaws, in brass or copper clamps. Proceed to hammer drift carefully down through drilled part, keeping drift upright and true with marking; a little lard oil or cutting compound on drift is helpful. If holes are drilled closely, the drift will pass through to centre quite easily, and must then be withdrawn by holding drift in vice this time, and tapping job with a piece of brass rod used as a hammer. By the way, a small brass hammer made from round drawn rod, with metal handle, is a useful tool to have at hand on bench. With a little practice, slot cutting will become a commonly successful job. Let your block of mild steel be slightly over size, so that should your slot run slanting to one side, the block can be trued to suit. The slots in rod end are cut also in a similar way.

Small thin cotter files for finishing can be obtained from the usual dealers, in sizes from 1/16" inch thick, or less, and various widths.

After trueing slot with file, both sides and ends, a finishing drift as before mentioned (Fig 11) can be driven through, but first make sure ends are square and parallel, and leave only a very small amount of metal for finish drifting. The finish drifting need only square out corners.

For larger size strap ends, say those above 1 inch in the gap, it may be less trouble to bend them from flat rod, using a shaped block to bend around. Heat to a bright red for bending, and hammer edges down in order to get a flat finish. In turning flat rod over a block, the edges have a tendency to not lie flat.

The remainder of metal shown dotted in Fig.9, to take brasses, is now drilled out and hack-sawed, leaving just a little for filing to a finish. The hole can be finished before sawing, to correct diameter required for radius of end brass.

Gib and cotters should be made from bright mild steel; as these are quite simple jobs, no further description is needed.

The usual taper on these details is ½ inch per foot.

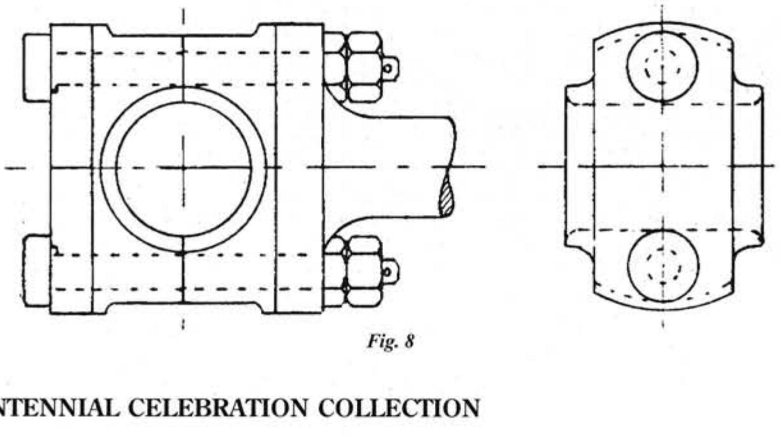

Fig. 8

First Steps in Model Engineering.

Workshop Advice, Experience and Philosophy for Readers of all Ages.

By "INCHOMETER."

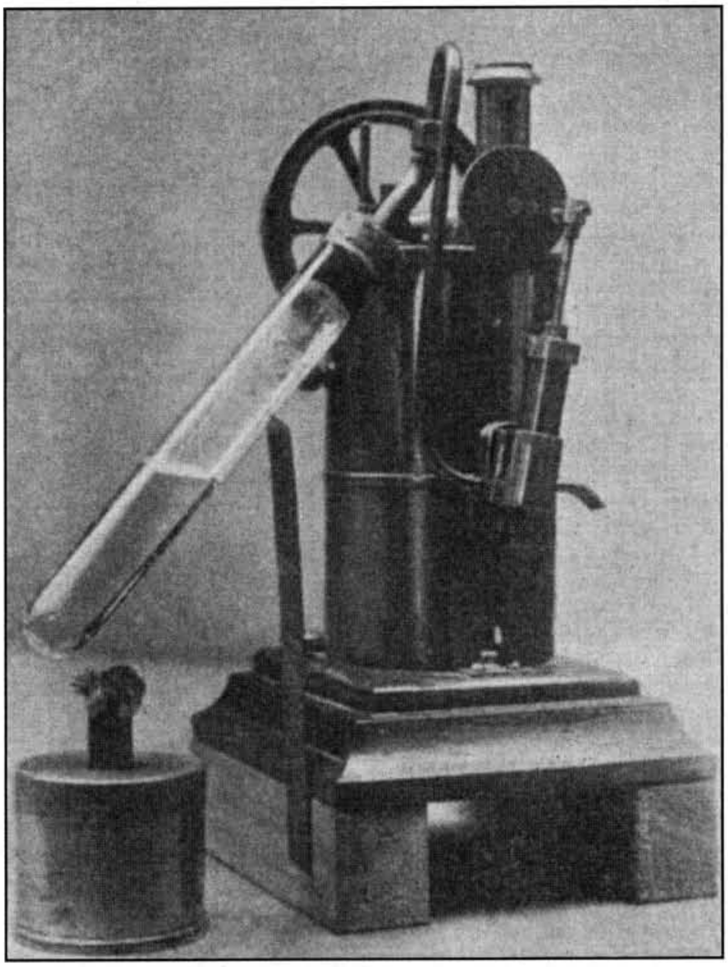

An old-time model steam engine with test-tube boilet.

Small Brass Vertical Single - acting Oscillating Engine.

"My earliest recollections of model engineering are associated with the little engine shown here. I plainly remember at the age of four years being allowed to turn the steam cock and set her to work.

Bunsen burners were unknown to us in those days and the boiler was fired with a 'Batswing' burner from the 5 light gas chandelier; the flame filled the firebox with soot and the dining room with a horrible smell.

As we grew older, the engine was given to us and at once became the chief attraction in the nursery, most of our pocket-money went to buy 'spirits of wine' for fuel.

Here it did an enormous amount of work, drawing or raising huge loads by means of the mechanism of an old clock, and it was actually built into a model roundabout, which it just failed to drive owing to faulty gearing. For a long time the piston rod head was lost, but the engine appeared to run just as well tied together with thread.

As I grew up, I lost sight of this model, but it was returned to me when I was getting my present workshop together. It was without the funnel and in a deplorable condition, so I overhauled it by fitting new bearings, shaft, etc., also ground out the cylinder, and was pleased to find, on testing, that it ran as well as ever and would turn over for two hours with one filling of water; I consider this a remarkable performance for a boiler measuring 2½ in. x 2¼ in. and a cylinder ⅜ in. x 1 in. stroke, and so as an experiment I fitted a small glass test tube as a boiler, as shown in the photograph.

The model was exhibited and steamed, by myself, at one of the Society's evenings, when it ran for 13½ minutes on 2 teaspoons of water.

The engine is probably of R. A. Lee's make and is an excellent example of what our grandparents could buy in the mathematical shops of those days. For design and workmanship it puts to shame much of the stamped-out rubbish found in the toy shops of to-day." S.W.S.

Supplementary Investigation.

The model maker, Robert A. Lee, was well known some 50 years ago; in my possession is a copy of his catalogue, date about 1882, so far as I can estimate. He was then in business in 76, High Holborn, London, having been previously established at Victoria Yard, Westminster, period is not stated, one of the testimonials printed in the catalogue is dated so far back as July, 1870, it refers to a model paddle steamer 6 feet 6 inches long and states "The workmanship reflects great credit upon you, I am very happy to be able to bear you this testimony." This letter came from Blairgowrie, in Scotland; another came from Lincoln, and one from Aberdeenshire; evidently Lee had an extensive business connection. There is, in this catalogue, an illustration of a model which corresponds to Mr.Simpson's in general appearance and details. In his letter accompanying the story he mentions that the original chimney was bell mouthed. " I may make another some day."

The catalogue illustration shows a bell-mouthed chimney, but the boiler is stated as being 3 inches diameter by 6½ inches high, evidently overall, internal firebox and chimney up which exhaust is discharged. The cylinder is described as "double action," ½ inch bore, 1¼ inches stroke, flywheel 3⅝ inches diameter; price of the model, £1 11s 6d., "a most substantial and good working model." The boiler fittings are steam tap, union, steam pipe, safety valve, manhole, water tap and spirit lamp. A double action cylinder means that steam is admitted to each side of the piston alternatively, thus giving two impulses for each revolution of the crank. The term " manhole" refers to an opening, fitted with a screwed plug or stopper, to enable water to be poured into the boiler. A water tap would be one placed about two-thirds way down from boiler top, its use is to test the level of water at any moment. If steam issues, the user knows that he must beware that the water level is becoming too low. These various details may be helpful to you when planning to make an elementary model, or restoring one which has come to your hands. Possibly Mr Simpson's model is of an earlier date and earlier size than that of the catalogue.

Models of a Beam Engine and Steam Turbine.

Illustrating 90 years' Progress with the Industrial Power Plant.

By A. W. M.

Here we have two models illustrating the history of steam power. The interesting point is that the beam engine model was built nearly 60 years before Percival Marshall produced the first issue of "Ours". It would deserve close study as being built in the workshop of Hick, Hargreaves & Co . Ltd., the model would closely follow the current practice of the day.

THOUGH this article has been originally inspired by my happening to see the models staged by Messrs. Hick, Hargreaves and Co., Ltd, of Soho Ironworks, Bolton, at the Shipping and Engineering Exhibition, Olympia, London, last September, a personal element developed which, I am sure, adds much to its value and interest for model engineers in particular. Enquiring as to the maker, or makers, I discovered that the beam engine was made in the Firm's workshops between the years 1840 and 1851, but the steam turbine model has been recently constructed at home by Mr John Denton, a member of the drawing office staff. He was awarded a diploma at the 1933 Model Engineer Exhibition for a scale model "Avro Mail Plane".

Historical.

Concluding that readers would principally be interested with the models and Mr. Denton and his model making activities, I have also thought that notes concerning the history of Messrs. Hick, Hargreaves and Co., Ltd., and their engineering work, would be appreciated. They are famous almost a house-hold word, in steam engine construction and mill wrighting. The firm was founded in the year 1833 by Benjamin Hick under the title of Benjamin Hick and Son; Benjamin Hick was an apprentice to the famous Matthew Murray, of Round Foundry, Leeds. He left Leeds to join Messrs. Rothwell, Hick and Rothwell, Union Foundry, Bolton. When 43 years of age, he relinquished his partnership in order to establish his own business with his two young sons. He built his new works on the site occupied today by the firm, and parts of the original buildings still exist. In the year 1842, Mr. Benjamin Hick died, age 52: his eldest son, John Hick, took over the business. In 1845, Mr. William Hargreaves became a partner, the title of the firm was altered to Hick, Hargreaves and Company. In 1868, John Hick retired, and William Hargreaves became sole proprietor until his death in 1889. The business was then converted into a private limited company and was carried on by his three sons. The firm have purchased the complete records, drawings and patterns of the following well known engineering firms, J. and E. Wood, Bolton: John Musgrave and Sons, Ltd., Bolton; Galloways, Ltd.,Manchester.

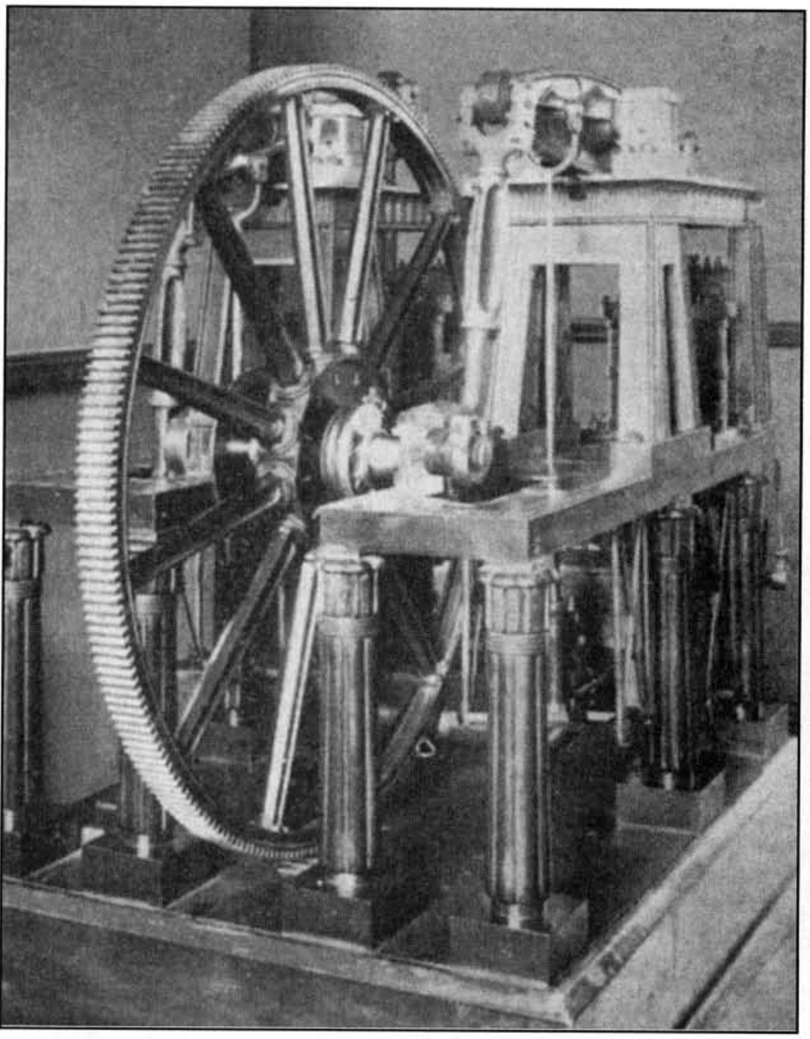

Model of a 240 h.p. Beam Engine made by Benjamin Hick and Son in 1840; dimensions, overall, of model 27 by 38 by 34 inches height, approx., diameter of gear wheel 32 inches; scale 1:10 (overhang of gear wheel not reckoned in).

Model of an Old Locomotive.

It will, I consider, be appropriate to mention that in The Model Engineer of September 12th, 1912, page 262, there is a photograph of an old model locomotive in the Chadwick Museum at Bolton, conjectured to have been made by John Hick, son of Benjamin Hick, the inscription plate states: "Locomotive Engine with 3 open ended cylinders, patented by Benjamin Hick, October 1834." The picture shows a 2-2-2 engine, with four wheel tender, inside cylinders, but outside drive, from a shaft, through crank and connecting rod. Marine Engines.

A considerable number of large marine engines were built at the Soho Iron Works, about the year 1850, two sets of simple direct acting jet condensing paddle engines, cylinder 68 inch diam. by 60 inches stroke, 300 rated nominal horse power, for H. M. Frigates "Alphonse" and "Amazonas"; two sets of simple direct acting inverted screw propeller engines, cylinders 47½ inch diameter by 54 inches stroke, for Mediterranean steamers "Nile" and "Orantes."

Corliss Valve Gear.

The renowned "Corliss" slide valve for steam engines was invented about the year 1850, in America, by G. H. Corliss; it was used to a large extent in that country, effecting considerable economy of steam per horse power developed. My recollection is that 50 years or so ago, mention of a steam engine fitted with Corliss valve gear, inferred that the engine was probably by Messrs. Hick, Hargreaves and Co.; it was almost inevitable to connect the one with the other. According to a booklet issued by the firm, they introduced this gear into England in 1864; Mr. Denton tells me that it was introduced from America by a Mr. Inglis and made by Hick, Hargreaves and Co., under the name of the "Inglis and Spencer" Corliss Valve Gear. From reference to a treatise on valves and valve gears, I conclude that this title is a recognised one and that its speciality consisted in a particular 'trip' arrangement of release. Various modifications of gear have been applied by different makers for working Corliss valves. In 1880 the firm made a 1,500 I.H.P horizontal single-cylinder condensing, Corliss engine, cylinder 52 inches diameter by 6 feet stroke, for a boiler pressure of 80 lbs. per square inch, and a flywheel weight of 90 tons. In 1891, triple expansion 4-cylinder Corliss engines were first built, and, altogether, until the Corliss type was superseded, about 1,500 engines were supplied, ranging from 40 to 4,000 indicated horse power.

The Beam Engine Model.

This is a scale working model of a beam engine made in 1840 for driving Messrs. Marshall's flax mills, at Holbeck, Leeds. The actual engine had cylinders 54 inches diameter, by 5 feet stroke, boiler pressure 15 lbs. per square inch, speed 19 revolutions per minute, 240 rated horse power. The model is of large size and I am informed, would steam now. It was made in the works some time between 1840 and 1851 and was shown in the Great Exhibition at Hyde Park, London, during the last mentioned year.

The Steam Turbine Model.

This is to the same scale as the Beam Engine and represents a steam turbine of 500 horse power capacity, running at a speed of 6,000 revolutions per minute. It drives through reduction gear on to a rope pulley running at 500 revolutions per minute.

Demonstrating Old and Modern Drives.

The purpose of exhibiting the two models, and their respective transmission gear, was to illustrate 90 years of progress in Industrial Power Plant. At the beam engine period, the prime mover ran at a slow speed and drove the mill, or factory, shafting at higher speed by means of a large diameter spur gear wheel meshing with a small diameter pinion, fixed upon an intermediate shaft. From this, power would be transmitted by other spur or bevel gears to the general shafting. The steam turbine running at high speed transmits power, first through an enclosed reduction gear and then by rope transmission to the general shafting. The respective methods of drive are shown in the accompanying photograph of the two models as exhibited together.

A Model Engineer and his Work.

The maker of the turbine model, Mr. John Denton, is interested in model aeroplanes, and he has attained some reputation in connection with these. He has no workshop proper, all his model making is done in the domestic living room and kitchen, but he expects to have the wash-house as a work-shop later on.

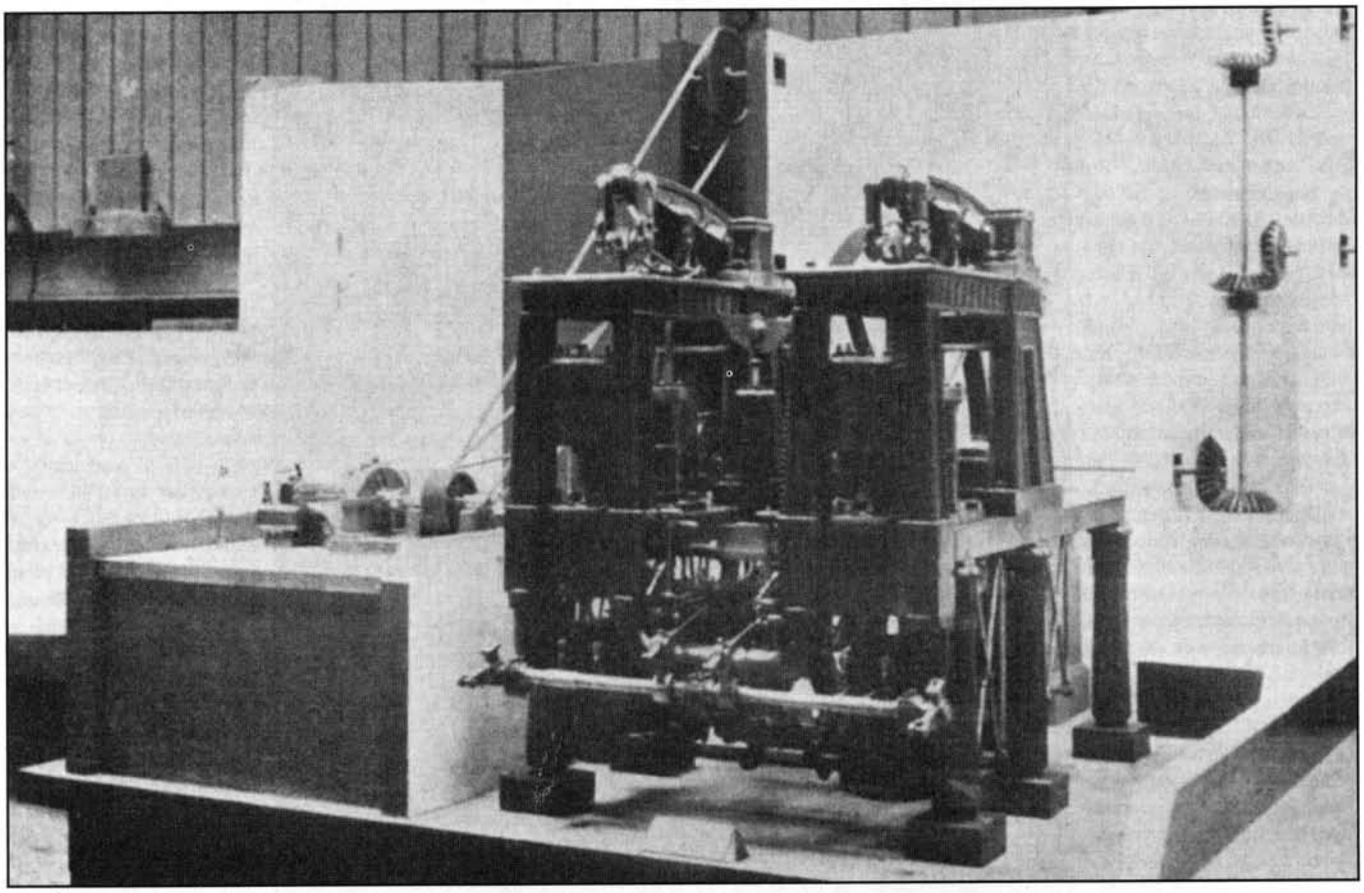

Model illustrating 90 years progress in Industrial Power Plant, a 240 h.p. beam engine, and a 500 h.p. steam turbine scale 1:10 approx., Messrs. Hick, Hargreaves and Co., Ltd., Bolton. Overall length of turbine model 17 inches, depth 7 inches approx., speed 6,000 revs. per minute turbine; 19 revs. per minute beam engine.

November 26, 1936

MODEL MARINE NOTES

Suggestions for Improving Flash Steam Plants.

IX.-An interesting “Flat Quad” Engine.

By Edgar T. Westbury.

CRITICISM is a thing which, like everything else, is worth doing well, if worth doing at all, and for this reason, I have not been sparing with rude remarks to the flash steam fraternity, alleging a general lack of originality and a good deal of cackling without much laying of eggs. It is only to be expected that, occasionally, the worms turn, but that is all to the good (particularly if the worms in question form part of the pump reduction gearing!) and even a wrathful retaliation is welcome, if it shows evidence that the sleeper is awakening to put his cherished dreams into progress. I have seen and heard of many new spots of activity in flash steam ranks lately, and only hope that they will soon bear fruit to add spice to regatta programmes.

One or two readers have reminded me, in a playful way, that, in respect of the charge of verbosity without action, I am in much the same position as the conservatory-dweller who gives a stone-throwing demonstration; and this, alas! is only too true. Unfortunately, my case is on a parallel with that of the zealous person who was much too busy showing people the way to Heaven to ever progress very far in that direction himself! It is a fact, lamentable from the point of view of those eagerly seeking instructors, that the man who produces the most successful concrete results is he who keeps his ideas under his own hat, and gets on with the job. I say it with full realisation of the gravity of the accusation - instructors are not the best champions, nor champions the best instructors. And, having made this excuse, I hope readers will bear with me in having to borrow such concrete examples of design as I am able to offer at present, from readers who are, perhaps, less eloquent, but more industrious, than myself.

I make no excuse for printing another episode from the flash steam series from Edgar T. Westbury. This shows a side of steam engine development that seems to be extinct today. It has the look of an I.C. engine and indeed it has a family resemblance with cam operated valves and a speed of 6000 to 8000 rpm. I have included the preamble as it gives an interesting insight to E.T.W.

One fact brought to light by correspondence on this subject is, that there is, at least one club in the British Isles which has whole-heartedly maintained an active interest in flash steam racing boats during the period of gradual extinction of the species which most clubs seem to have suffered in recent years. I refer to the Dublin Society of Model Engineers, many members of which are red-hot flash steam enthusiasts, and, strangely enough, have boats to show for it, too! I had the pleasure of meeting Mr. E. A.Tramp, of this Society, for a brief moment at the Exhibition (though whenever I managed to find a few minutes to speak to him, he had vanished into thin - or, rather, in some cases, a little bit thick - air), and examined a blowlamp flame he had bought with him, in which deflectors were arranged to produce a rotary motion of the incoming air and promote atomisation. This principle, stated to be very successful in keeping the lamp burning consistently under all conditions, is very similar to that employed in the oil burners used for boiler firing in the Navy, where both Mr. Tramp and myself had the honour of serving during the last Big Muddle.

View from port quarter, showing oil tank and gravity feed to pump gearing, also arrangement of water pump.

Another member of the Dublin S.M.E., Mr. J. Willis, has sent me particulars of the very interesting engine which forms the main subject of the present article. It is a four-cylinder single-acting engine, ¾ in. bore by ¾ in. stroke, having the cylinders arranged horizontally in pairs on opposite sides of the crankcase. The total displacement of the engine is 1.325 cubic inches, or very slightly greater than that of a single-cylinder single-acting engine of 1⅛ in. bore by 1¼ in. stroke. As will be seen from the photographs, the general design of the engine is distinctly un-orthodox, and embodies many ingenious and original features.

Construction

The cast aluminium crankcase is divided on the vertical longitudinal centre line, and the two halves are bored on the end faces to form housings for double-row self aligning ball races, 9 mm. bore, which carry the two-throw crankshaft. Each throw of the latter, the crankpins of which are 5/16 in. diameter, operates two opposite pistons, through steel connecting rods of tapered round section, flattened on the sides, and hollowed internally. Both big- and little-end bearings are of phosphor bronze, and, in respect of the design of big-end, which is apparently unique for engines of this type, Mr. Willis presents an intriguing little puzzle to test the ingenuity of readers. Each big-end bearing is the full length of the crankpin, that is, ½ in long, and has approximately 130 deg. of bearing surface. The connecting rods are not forked or offset, and there are no bolts and nuts in the entire big-end assembly, but the connecting rods can be fitted and detached without the aid of any tool, expect a large pin. How is it done? I have a shrewd suspicion that I know the general principles of this bearing arrangement, but Mr. Willis would like to know what readers think about it, and is holding over the solution, pending their opinions. The design is not likely to be entirely satisfactory, except on engines in which the thrust is practically always in one direction, but has been very successful in this particular case; the big-ends "stay put" indefinitely at 6,000 to 8,000 r.p.m., and are adequately lubricated.

The pistons are of mild steel, machined from the solid, and the cylinders, which are spigoted in the crankcase, are virtually plain tubes bored from a section of Ford rear axle. Two cast-iron steam chests, each forming a common cylinder head for the two adjacent cylinders, are spigoted thereto, and held in place by means of two tension bolts with turnbuckles, at the top and bottom respectively (one of these can be clearly seen in the underside view of the engine). Stainless steel piston valves, ⅜ in diameter, with inside admission, are fitted, operated by rocking levers from a large diameter track cam on the crankshaft, the engagement of the lever with the cam groove being by a spherical roller running freely on a pin turned on the lever end, while the fork at the other end engages a flanged roller attached to the valve rod. The rollers are, of course, hardened, and help to decrease the friction and side thrusts of the gear. Valve travel is ¼ in., and the steam ports are ⅛ in. by ½ in., measured on the circumference of the valve. The cam design gives quick opening and closing, allowing 150 deg. steam admission, and is timed to give a pretty big lead.

Pumps and Gearing.

The pumps employed on this plant are of a very unusual type, being double-acting, but without any form of gland. In both water and oil pumps, the valve chests are at the extremities of the barrel, and a double-ended plunger, operated by means of a gudgeon pin in the centre of its length, working through guide slots in the barrel, from a long connecting rod. The water pump is 5/16 in. bore and variable stroke from 5/16 in. to ⅝ in. by increments of 1/16 in. It is geared 10 to 1 from the engine shaft by worm reduction gear, and the oil pump is driven through a spur gearing on the worm-wheel shaft, giving a further 4½ to 1 reduction, or 45 to 1 from the engine.

(To be concluded.)

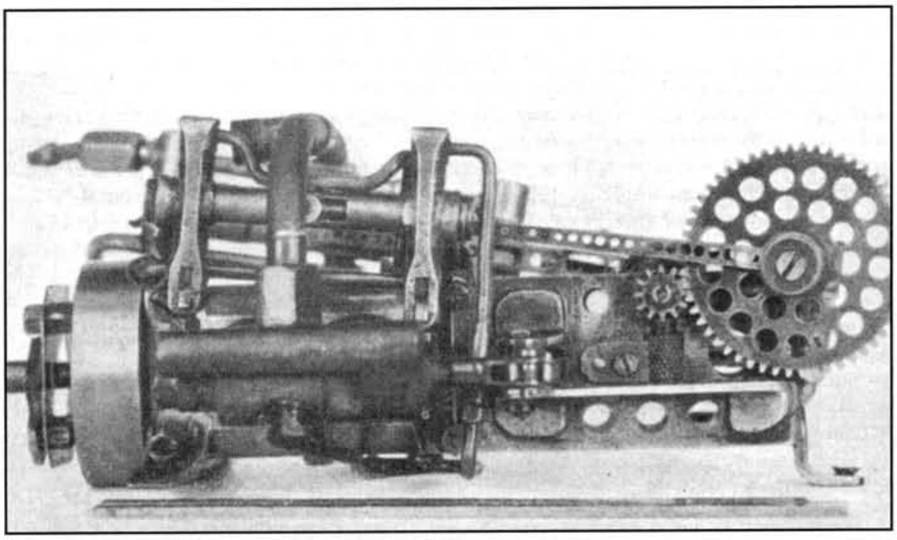

Starboard side view of engine, showing oil pump.

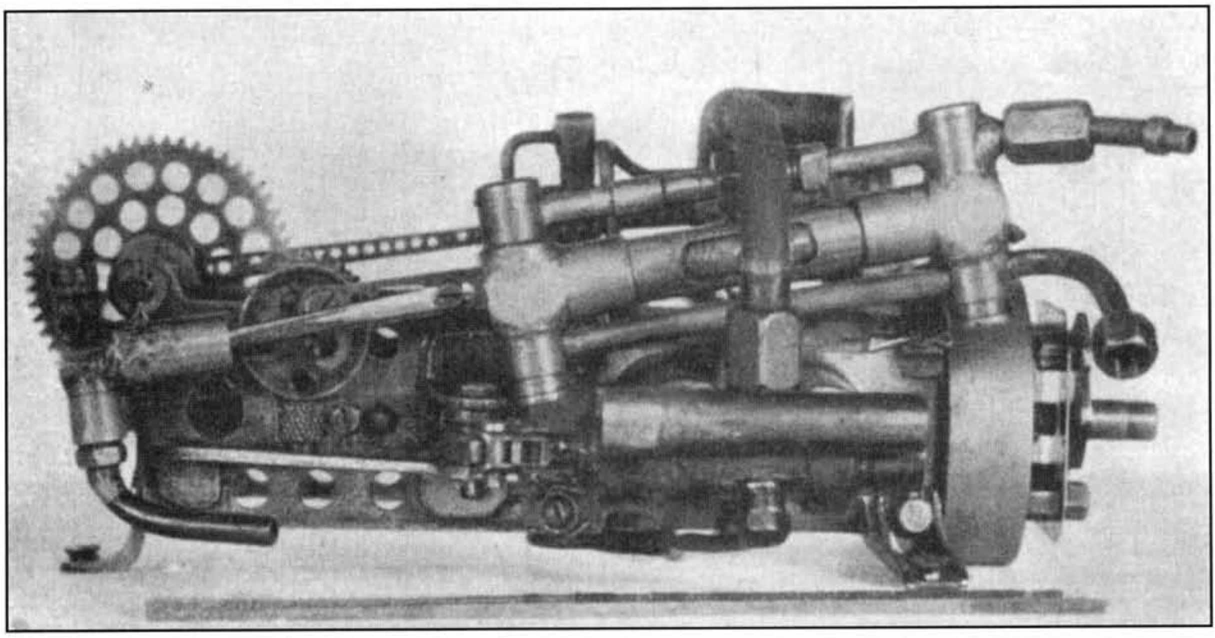

Port side view, showing feed pump and link-operated bilge pump.

February 11, 1937

Bilge Ejectors for Model Steam Boats.

A READER has asked our advice regarding the design of a steam-operated ejector to pump out the bilges of a metre cabin cruiser, which collects a fair amount of bilge-water through condensation and slight leakage of engine and propeller-shaft glands. The steam pressure available is 50 lbs. per sq. in., and there is a convenient plug available on the boiler from which to run the steam service to the ejector. A suggestion is made to the effect that exhaust steam might be employed to operate the ejector, but although this might in some circumstances be possible, it would probably call for much more experimental work, and is not recommended, in view of the fact that back pressure of any kind on a model steam engine is to be avoided whenever possible. The expenditure of live steam necessary to work the ejector would be very small.

Both the principles and construction of a steam-operated bilge ejector are quite simple, but on account of the lack of exact data on small size devices of this nature, it is probable that a certain amount of experiment and careful adjustment in respect of the size of orifices and separation distances will be necessary in order to obtain the best results.

A sketch is given herewith of a simply-constructed form of ejector which should be found quite adequate to deal with all the bilge-water made in a model boat of the size specified. The body consists of a ⅜ in. tee piece, screwed internally, ¼ in. x 40 t.p.i. all three branches, the two opposite of which carry the steam and delivery cones respectively. One of these should have a running thread and locknut, to allow of adjusting the distance between them. The steam cone may be drilled No.70 and broached slightly taper, and the size recommended for the delivery cone is No. 48, tapered each way and flared on the entry side, as shown. The taper at the outlet end should be at least twice as long as the entry taper. A suction fitting having a gauze or perforated metal strainer should be screwed into the third branch of the tee, as close up as possible, so as to allow of placing the entire ejector as low down in the bilge as possible, and avoid unnecessary lift. The pipe leading overboard from the delivery must be of ample bore, and free from kinks and sharp bends. In order to obtain maximum efficiency from ejectors of this type, the sizes of orifices and relative positions must be so adjusted that the steam jet, which spreads out on leaving the steam cone, exactly fills the throat of the delivery cone; if it spills around the sides, due to the cones being too far apart, or not of correct relative size, there will be a tendency to blow-back at the suction. On the other hand, if the steam jet does not fill the delivery cone, efficiency is very low, and the ejector may refuse to lift. It will be quite obvious that the cones must be in exact alignment, and thus they must be very carefully turned, screwed and drilled, and the tap should be run completely through the tee piece from one side only. If, however, these elementary rules are observed, an ejector of this type is bound to be successful.

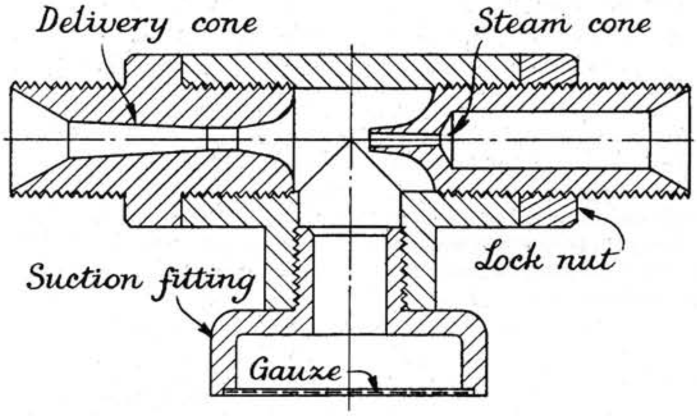

A suggested design for a steam operated bilge ejector for model boats. (Twice full size).

Above I have shown a suggestion for a steam ejector to clear a boat's bilges. It led me to wonder if anyone has thought of installing an injector in a water tank to keep it cool. It would need good insulation on the steam pipe to prevent premature condensation. I had a friend who fitted adjustable steam cones to his injectors and they always ran dry.

THE MODEL ENGINEER, JUNE 17, 1937

Practical Letters from our Readers

December 2, 1937

Model Marine Steam Turbines

Dear Sir, - In reply to your correspondent's query in the September 30th issue of the "M.E.," regarding peripheral speed of model rotors, I think a good practical solution would be to make a model on the lines of the "Ljungström" turbine, in which there are two separate rotors, each running in opposite directions. The blades are mounted on discs, attached to shafts carrying separate alternators, and these blades are arranged so that a ring of blades on one disc lies between two rings on the opposite disc. Steam enters at the centre and flows radially outwards before dropping to the condenser.

The important aspect of this arrangement is that the relative blade speed is double the peripheral speed. As you point out in your footnote, this aspect of the matter is not insurmountable, and I offer this suggestion for anyone who wants a bit of experimental work in a field of model making which he will not find overcrowded by any means.

Yours faithfully,
Urmston. A.S.W.

Old Paddle Engines

Dear Sir, - I was much interested, coming across a practical letter in a back number of The Model Engineer, dated 5th July, 1934, entitled "Old Paddle Engines," by Mr. R. C. Menzies. The writer was referring to the old Clyde-built paddle steamer, Glencoe, built in 1846, by that once-famous Clyde firm, "Tod and McGregor." Like the writer, I had the pleasure of seeing through the Glencoe when she was exhibited, along with the new Diesel-engined boat, The Loch Fyne, at the time of Glasgow's Civic Week in June, 1931. I was particularly interested in seeing the engine, which was of the "Steeple" type, the earliest form of marine engine. The Glencoe was broken up, but her engine has been preserved, although, sad to say, not assembled, and the parts, such as cylinder, condenser, air-pump, and bow frame and cross-head are still to be seen in the sunk area outside the Kelvingrove Art Galleries, Glasgow. I may add, for the benefit of the writer of the letter, that it can only be seen looking from the windows of the Art Gallery. It is a pity an old antique like this should not be re-erected. It would make a most interesting exhibit to marine engineers, and also to model-makers.

I notice the writer, Mr. Menzies, has furnished a sketch, from memory, of the engine; but I would beg to correct that by submitting a sketch, also from memory. The Glencoe's single-cylinder engine had only one crank. Mr. Menzies has mistaken the two crank-webs of one crank for two cranks. There was a yoke, fixed on the end of piston-rod, with a cotter, and an A-shaped frame, fixed from the two ends of yoke, terminated at the cross-head-pin. There was a projecting-lug from one of the arms of the A-shaped frame, which worked the air-pump. The valve-gear was of the single eccentric type, and reversing and starting was done by lifting the gab on the eccentric-rod clear of the pin on the valve-spindle rocking lever, and operating the slide-valve backward and forward by hand-lever.

I remember seeing another eccentric-rod from an eccentric on the crankshaft, which went right over to a bell-crank lever fixed on to a wyper shaft, which ran along the front of condenser. On the other end of the bell-crank was fixed a pump-rod, which, I presume, worked the feed-and bilge-pumps.

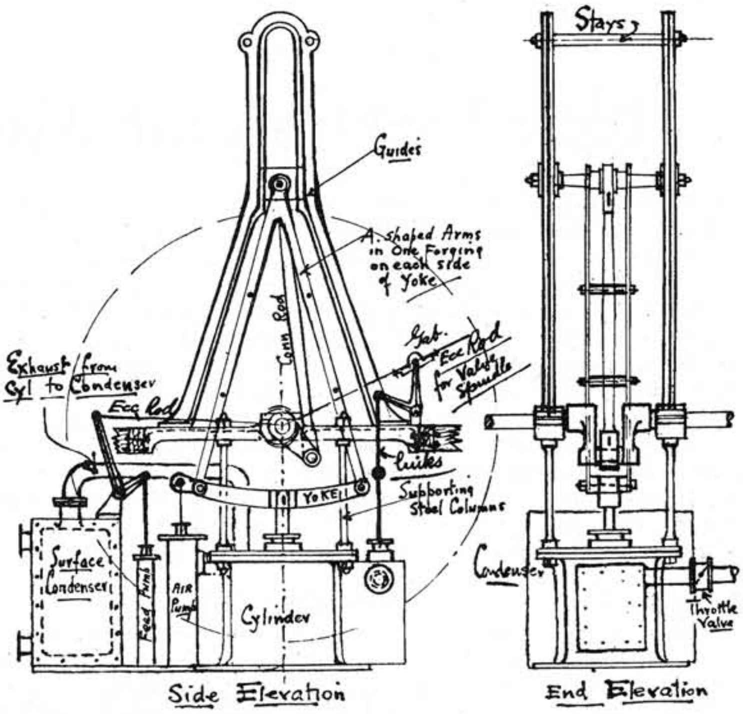

I may add to this that there is a magnificent model to be seen in the Art Galleries Museum, Glasgow; one-quarter full size of the "Steeple" engines of the Simla, built in 1854 by Tod and McGregor. The model is about 8 ft. high.

Trusting the sketch may be of interest to readers of The Model Engineer.

Yours faithfully,

J. A. BLYTH. Glasgow.

The Model Engineer, November 18, 1937

One of the joys of model engineering is to experiment and try out designs of your own. The field of stationary engines is wide open to the experimenter as we have seen and here we have another aspect that is full of promise. The swashplate is common in many fluid pressure engines and pumps but is rarely seen in model stationary engines. I hope to see examples in a forthcoming Model Engineer Exhibition, they are fascinating to watch in action.

Some Notes on Swashplate Engines

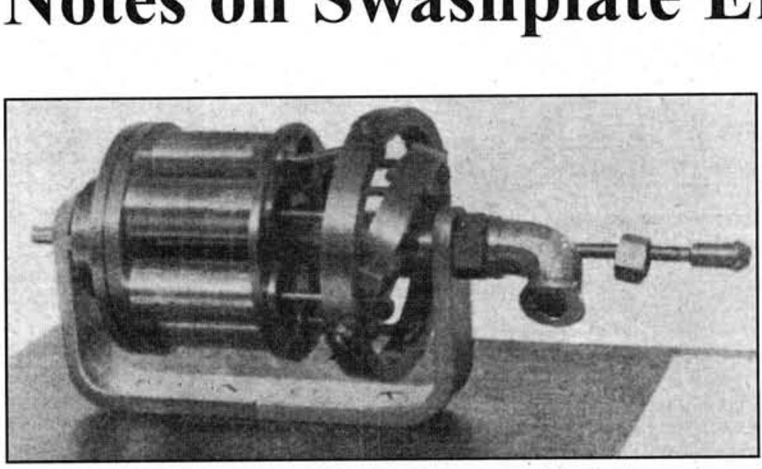

A rotary engine embodying the principle of the swashplate, exhibited at this year's "M.E." Exhibition, by Mr, B. H. Bayliss. In this engine, the swash-plate (or its equivalent) is fixed, and the cylinders, pistons and rods rotate.

ONE of our readers, referring to the brief mention of a rotary engine of the swashplate type, in a recent issue of the "M.E.", has asked us to enlighten him as to what a 'swashplate' is, and the principle upon which it works. In view of the fact that there are many types of engines and other machines which work on this principle, and that there does not appear to be a wealth of available information about it, some fundamental particulars may be found generally acceptable.

The swashplate is, essentially, a substitute for the crankshaft in any mechanism which calls for translation of motion from rotary to reciprocating, or vice versa. It may thus be employed in any kind of fluid pressure engine, including internal combustion engines, or in pumps for gases or liquids. The usual arrangement of machines in which a crankshaft is employed for translation of motion, entails that the reciprocating element should be at right angles to that which rotates; but in a machine employing a swashplate, the reciprocating element is in the same axial plane as the rotating shaft, and may be even concentric with it. The usual swashplate machine, however, employs a multiplicity of reciprocating elements, such as pistons, grouped axially around the shaft, and is thus the most compact form in which such a mechanism can be arranged.

The swashplate, in its simplest form, consists of a disc fixed to a shaft at an angle, so that rotation of the shaft causes it to wobble (Fig. 1). It is thus

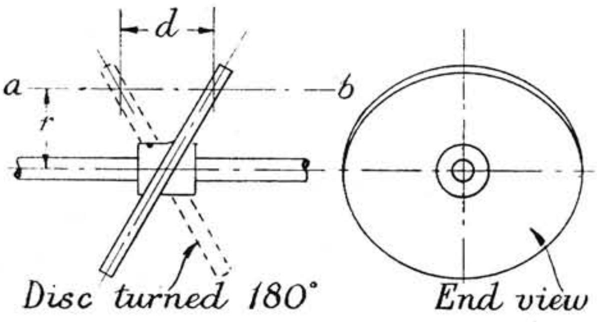

Fig. 1. Diagram explaining the mechanical principle of the swashplate.

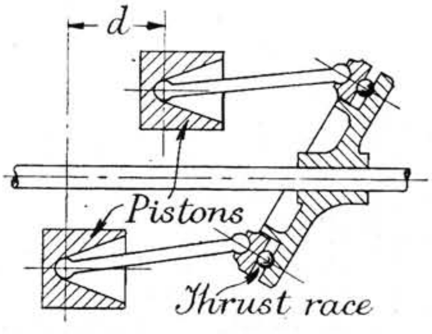

Fig. 2. Mechanical connection of pistons to a swashplate, showing method of taking end thrust.

apparent that in any fixed plane a b parallel with the shaft, and separated from it by the radius r, the point of contact with the disc, as the latter rotates, will traverse a certain distance d either way, and thus produce a reciprocating motion in any mechanical member making contact with it in this plane. The distance traversed is determined by the angle at which the disc is inclined to the shaft, and the radius r.

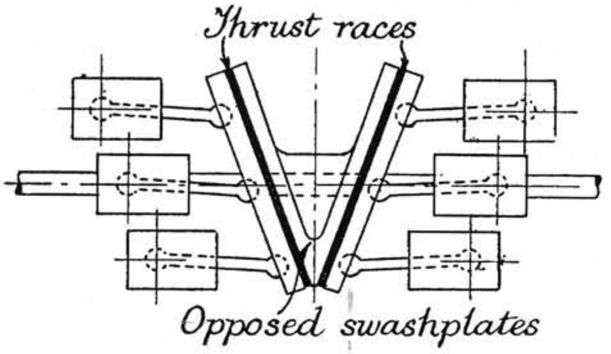

Fig. 3. Swashplate systems arranged in opposition to balance out end thrust on shaft.

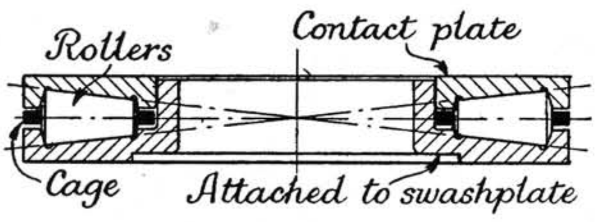

Fig. 4. A form of roller thrust race suitable for heavy duty swashplate engine.

Owing to the sliding thrust between the reciprocating and rotating elements, a form of thrust bearing must be interposed, and this may consist of a loose contact plate with a ball or roller thrust ring behind it as in Fig. 2. The attachment of the pistons or equivalent parts to the contact plate must be flexibly articulated, so as to allow for the change in the swashplate angularity as the latter rotates, and also for the fact that the path of the contact circle, viewed from the end of the shaft, is not a true circle, but an ellipse (see Fig. 1). The angularity of the connecting rods is, however, generally less than those employed in a normal crank system. A common form of articulation is by means of a ball and socket joint at either end.

Most engines working on this principle are single-acting, as neither the swashplate bearing or the bearings at the ends of the rods are well adapted to take thrust in both directions. This results in a considerable end thrust on the driving shaft, in opposition to that on the swashplate, and provision for withstanding end thrusts is the most serious mechanical problem in the transmission of high power by this method. In some cases, notably that of hydraulic engines, as employed for turret operation in battleships, two complete sets of cylinders and pistons are opposed against each other, as shown in Fig. 3, and the swashplate is made with opposed inclined faces to obtain dynamic balance of the reciprocating parts. The end thrust on the swashplate, however, still remains, and cannot be eliminated.

The inventor of the Michell thrust bearing has applied the principle of this device in a high-powered internal combustion swashplate engine, with very promising results. In some other engines, tapered roller bearings are interposed between bevelled thrust races, in a similar manner to bevel pinions engaging crown wheels of large diameter, as shown in Fig. 4. Nevertheless, the problem of end thrust is still the limiting factor in the power that can be practically transmitted by a swashplate.

Variable-Throw Engines

One of the attractive features of the swashplate engine, and one which has been exhaustively exploited by inventors, is the facility with which the stroke of the pistons can be varied, by altering the inclination of the swashplate. In order to effect this, the swashplate, instead of being fixed to the shaft, is pivoted on trunnions, as shown in Fig. 5, and one side of it is connected by a link to a sliding collar, endwise movement of which alters the angle of the swashplate. The simple hand lever method of operating this collar, however, is only practicable when comparatively small power is transmitted, because of the tendency of the swashplate to alter its angle under the applied end thrust of the pistons. The gear generally used for adjusting the swashplate is very similar to that employed in a variable-pitch airscrew hub.

Variable-throw swashplates have been used or proposed for a wide variety of devices, including controllable metering pumps, torque converters or hydraulic transmission gears, and special types of steam, compressed air or I.C. engines. One of the most successful practical applications of this principle is the Williams Janney variable transmission gear, which embodies two distinct multi-cylinder swashplate units, placed back to back in a single casing, but having separate shafts. One of the units is fitted with a variable-throw

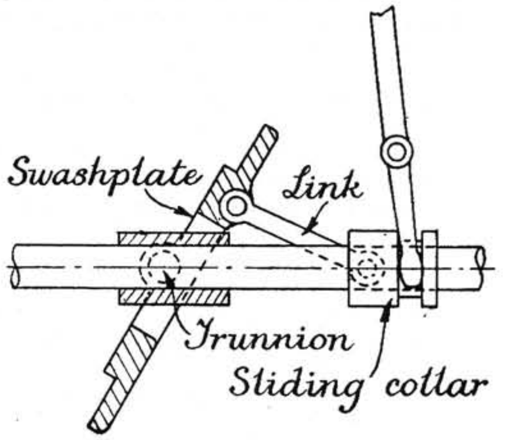

Fig. 5. Method of obtaining a variable throw with a pivoted swashplate.

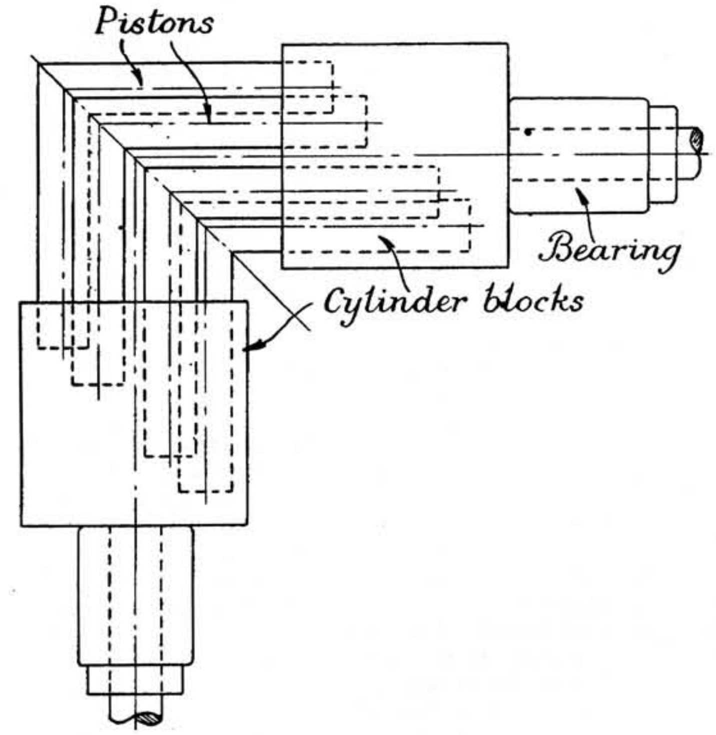

Fig. 6. This ingenious device, first introduced as a right-angled shaft coupling, may be adapted to work an engine. The "imaginary swashplate" bisects the angle at which the cylinders are set, and passes through the angle of the bent piston rods at any position of their stroke.

swashplate, controllable from zero to full throw, and acts as a hydraulic pump, delivering fluid under pressure to the second unit, which functions as a motor. The control obtainable with this transmission gear is remarkably delicate.

Modifications of the Swashplate Principle

There are many variants of the simple swashplate, which embody the same basic principle. In some cases, the entire piston and cylinder assembly rotate, and a fixed inclined plane at the other end of the engine serves the purpose of the swashplate. This arrangement has some advantages when the problem of obtaining a controlled variable throw is considered. A very interesting development of the principle in which it might be said that an imaginary swashplate is employed, consists of two rotating cylinder assemblies situated at right angles to each other, as shown in Fig. 6. Opposite pistons in each respective cylinder block are connected by rigid rods, bent at right angles in the middle. These form coupling members between the cylinder blocks, so that they rotate together, and the pistons are caused to reciprocate. In effect, the motion is the same as would be caused by a swashplate bisecting the angle between the blocks, i.e., at 45° to each, and passing exactly through the angles of the piston rods.

Another similar idea to the above consists of what is virtually a Hooke's joint, as used to allow for angular misalignment when coupling rotating shafts. This is arranged with the two shafts at a fairly considerable angle to each other, and one of the joint members has cylinders attached to it. Pistons are attached by articulated rods to the second joint member, as shown in Fig. 7. The central cross-shaped member of the joint serves the purpose of coupling the two shafts to rotate in unison, and thus avoid twisting of the piston rods.

A substitute for the swashplate which is claimed to have some mechanical advantages is the Z-crank, shown diagrammatically in Fig. 8. This device, sometimes termed a 'wobble crank', consists of a shaft having a central journal inclined to the main axis, and a bearing member, with extended arms, freely mounted upon it, so as to allow of relative rotation. Any number of arms, corresponding with the number of cylinders employed, may be radially extended at right angles to the bearing axis, and this assembly, generally termed a 'spider', takes the place of the swashplate, with the important difference that it does not need to rotate, and thus the large diameter thrust race commonly employed becomes unnecessary. The end thrust is, however, still registered on the spider, but can be compensated by a smaller thrust race at the end of the bearing.

It is necessary to prevent the spider from being dragged round with the crank, as this would twist the piston rods, and for this purpose a link or die block is usually fitted to anchor the spider to a stationary part of the structure. An experimental aircraft engine, in which the salient feature was the reduction in frontal area, was built to work on this principle a few years ago.

In small engines, it is possible to dispense with the loose contact plate and thrust bearing of the ordinary swashplate, by hardening the latter and using long, well-guided pistons with carefully rounded, hardened and polished ends, making direct contact with it. Although only line contact is possible with this arrangement, and the sliding friction is comparatively high, it works well enough in small engines, under good lubrication conditions.

There is, however, a great advantage, in this case, in modifying the plane surface of the swashplate so as to form a face cam, the track of which is machined at right angles to the axis, as shown in Fig. 9, instead of following the slope of the inclined face. This enables the bearing surface of the piston ends to be much improved, as they can then be formed to a cylindrically rounded end, which makes a line contact with the face cam in all positions of rotation. Another advantage of the cam over the swashplate is that it can, if desired, be formed with an irregular contour, allowing any period of the cycle to be lengthened or shortened. This has several times been proposed for I.C. engines, the idea being to obtain increased efficiency by speeding up or slowing down portions of the cycle. The use of a double-cycle or 'switchback' cam allows the full cycle of a four-stroke engine to be completed in one revolution of the driving shaft.

Valve Gear for Swashplate Engines

It has been mentioned that the Desoutter air motor is fitted with a rotary valve, and as a matter of fact, this type of valve is particularly well adapted for use in swashplate engines, as the close grouping of cylinders around the shaft centre allows of the simplest method of driving a single valve to serve all cylinders, and the communicating passages are extremely short and direct. The type of valve most favoured, at least in steam, pneumatic and hydraulic engines, is one having a flat or conical seating, held tight by the working pressure on the back, and exhausting into an annular

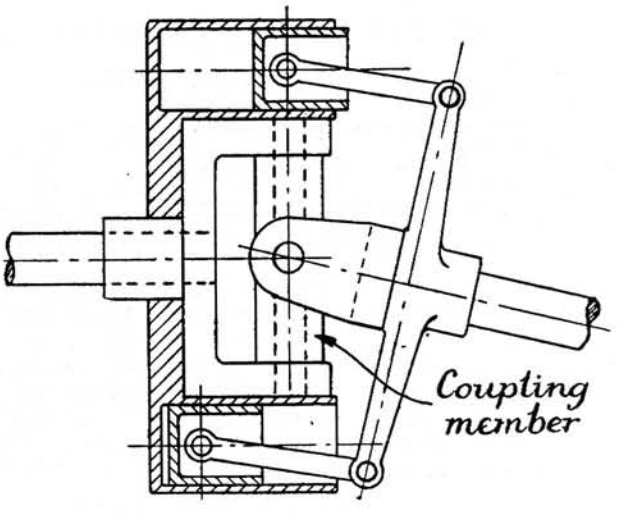

Fig. 7. By attaching cylinder and piston elements to the respective members of a Hooke's coupling, it can be adapted to work as an engine or pump. The piston stroke may be varied by altering the angularity between the two shafts.

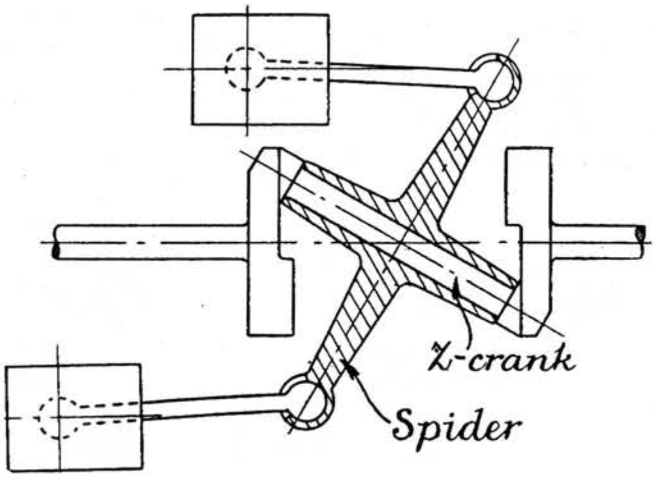

Fig. 8. Illustrating the principle of the Z-crank. The hub of the spider is a running fit on the inclined shaft, and is prevented by suitable anchorage from rotating with it.

space around the driving shaft. Valves of this type are liable to considerable friction, and both valve and face must be made of the best wearing materials possible. In some cases they are balanced by an opposed piston extension, and in others, multi-ported valves are employed, driven at reduced speed by epicyclic gearing. Other valve gears than the rotary type are sometimes used, and for I.C. engines, poppet valves may be employed, operated from an epicyclic geared camshaft, arranged concentrically with the shaft.

Applications in Model Engineering

The disadvantages of swashplate engines, as previously mentioned, are much less serious in small engines than in large ones, and to conclude this review of the subject, it may be apt to indicate their possibilities for use in model power plants.

A comparatively simple swashplate engine working on either high-pressure or low-pressure steam would make an excellent propulsion unit for a boat, having the advantages of extreme compactness and low centre of gravity, the latter being situated at shaft level. By the use of correct materials and good workmanship, it could be made quite suitable for use with flash steam hydroplanes, and apart from mechanical advantages, the close cylinder grouping would reduce condensation losses and promote structural rigidity. If three or more cylinders are fitted, the engine will have no dead centres, and will thus always be self-starting.

In model aircraft, a swashplate engine running on compressed air would represent practically the last word in compactness and high power-weight ratio. It is perhaps a little ambitious to suggest that model I.C. engines should be built on the swashplate principle, but it is by no means an impossible proposal, although the stresses being much more severe in this type of engine, both design and construction involve very exacting problems.

There are many other departments of model engineering in which the problem arises of installing an extremely powerful engine in an apparently impossibly tiny space, and in such cases the swashplate principle may offer a practical solution. Most model locomotive enthusiasts would shudder with horror at the thought of using this type of engine in a locomotive, and it certainly could not be entertained in cases where adherence to full-sized design is considered, but from the purely experimental point of view, it offers some interesting possibilities even in this sphere.

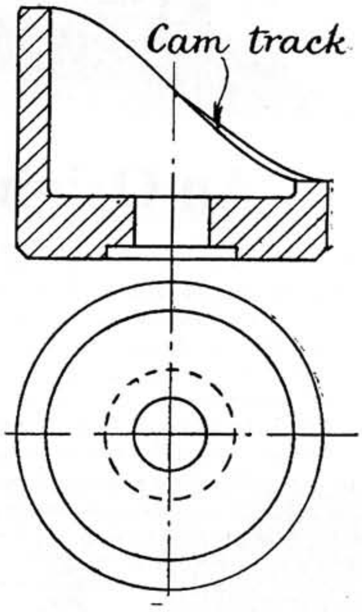

Fig. 9. Form of face cam used as a substitute for a swashplate.

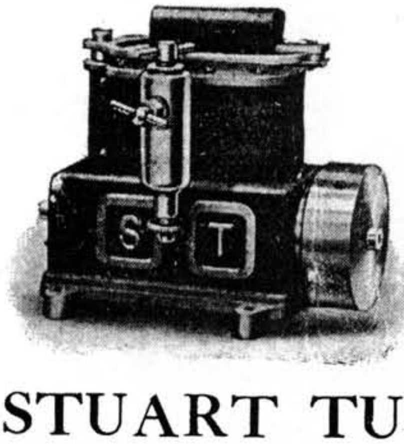

In the late 1930's there was a distinct enthusiasm for the freelance marine engine to drive high speed boats and here we have a flat twin with a number of original features. The author "Artificer" was a pen name used by Edgar T. Westbury and this design appears to be another from his fertile brain. The model would require simple castings or fabrication from the solid, anyway it would make a fine sight running at 2000 revs.

MODEL MARINE NOTES

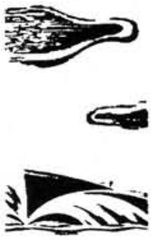

An Original Model Marine Steam Plant

By "ARTIFICER "

THE engine, shown in sectional elevation and plan in Fig. 2, is of the horizontal, twin-cylinder type, and is, also, very unconventional in design, for, although there is nothing new in the idea of a 'flat twin' steam engine, the arrangement of this one embodies several distinctly original features. It is single-acting, with piston-valves, and both pistons are operated from a single-throw crank. The latter is overhung, and runs in two single-row ball-races, which, in the original, are 3/16" bore; but, as these very small races are comparatively expensive, and, also, with a view to improving rigidity of the shaft, 1/4" races have been substituted in the drawings. It will be noted that the shaft is parallel throughout its length, and the flywheel is attached by means of a split tapered bush, with a draw-thread which grips the shaft in the same way as a split chuck. This feature also ensures maximum strength and rigidity of the shaft. The crank disc is 1 1/8" diameter by 3/16" thick, and is partially balanced by slots cut in it at each side of the crankpin. The latter

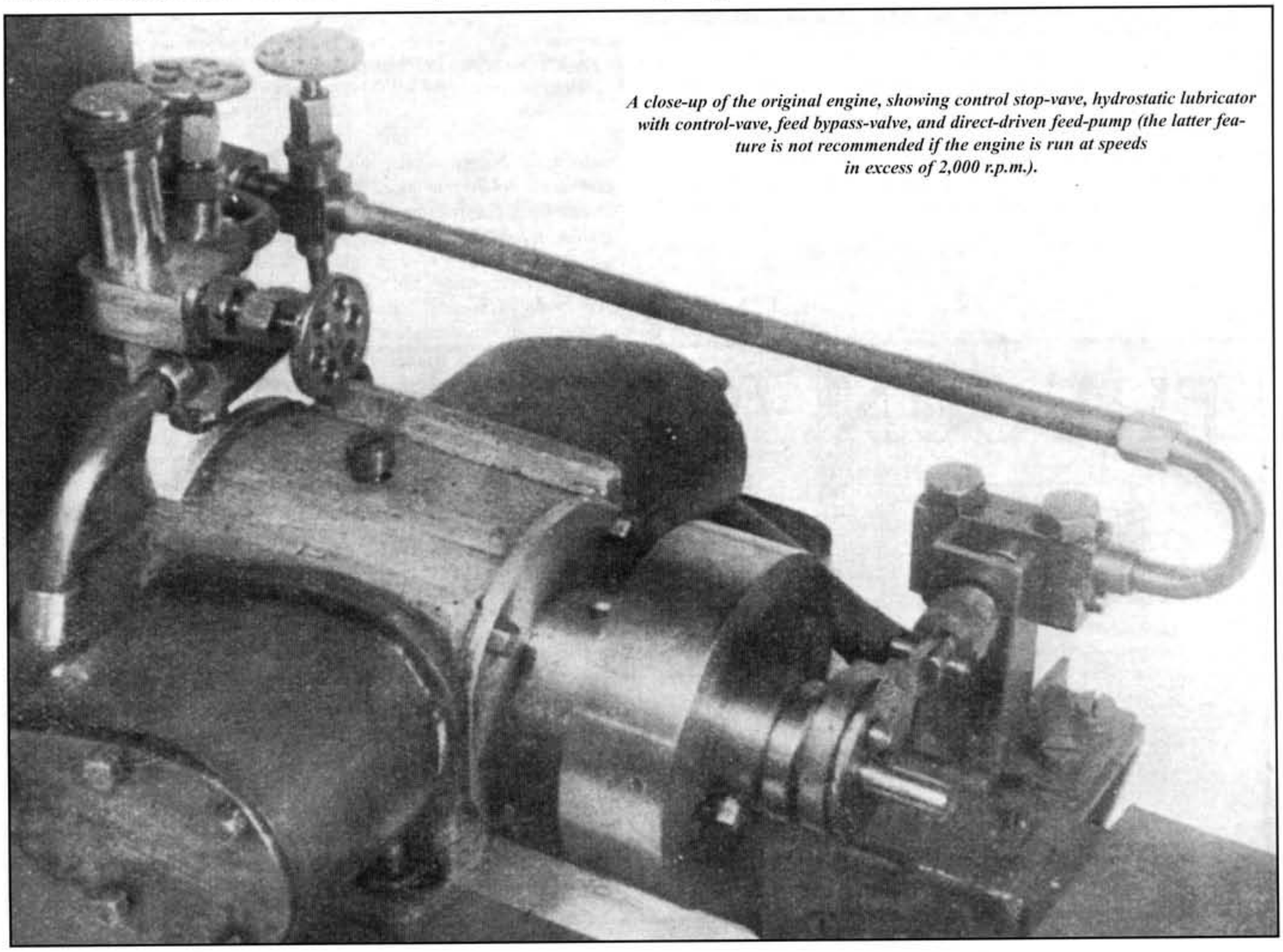

A close-up of the original engine, showing control stop-vave, hydrostatic lubricator with control-vave, feed bypass-valve, and direct-driven feed-pump (the latter feature is not recommended if the engine is run at speeds in excess of 2,000 r.p.m.).

is ¼" diameter, shouldered down to 3/16" to take the return-crank, which operates the piston-valves.

With regard to the latter feature, some readers may not be very keen on the use of a return-crank, and it is quite true that, in many respects, an eccentric may be considered preferable, as it can readily be set in any relation to the main crank, and is generally more rigid and mechanically sound. The use of an eccentric, however, practically entails fitting a full crank with a bearing each side; this, again, may be considered better practice, but the effect on the general design and accessibility should be studied before incorporating these features. It is a comparatively small matter to fit a bearing in the front end-plate of the crankcase, but the crankshaft will be a much more difficult job, and, unless a very carefully made detachable web is fitted, it will be necessary to split the forked connecting-rod bearings, which, it will be agreed, is a rather delicate job, and introduces an element of fragility which is not conducive to reliability, if the engine is run at high speed. The matter of assembling these split bearings, in the limited space available, should also be taken into consideration.

The return-crank is entirely successful, in practice, if fitted as suggested, and the simple arrangement of the crankshaft and motion has a good deal to recommend it. Where high-speed engines are concerned, it is often found that mechanically 'correct' motions are less reliable than those in which simplicity and immunity from possible disruption are the main features.

Cast-iron cylinder-blocks are fitted, each with four studs and nuts, to opposite sides of the crankcase. Cylinder dimensions are ⅝" bore by ⅝" stroke, and piston-valves ¼" bore by ¼" stroke. The port arrangements of the latter are a little unusual, as it will be seen that the steam and exhaust passages are drilled from the side of the block, through the piston-valve bore, into a drilled passage parallel with the cylinder axis, and communicating with the latter at the outer end. This simplifies the formation of the passages, and, also, provides a longer sealing surface on the piston-valve between the steam and exhaust controlling edges than is possible with the usual arrangement.

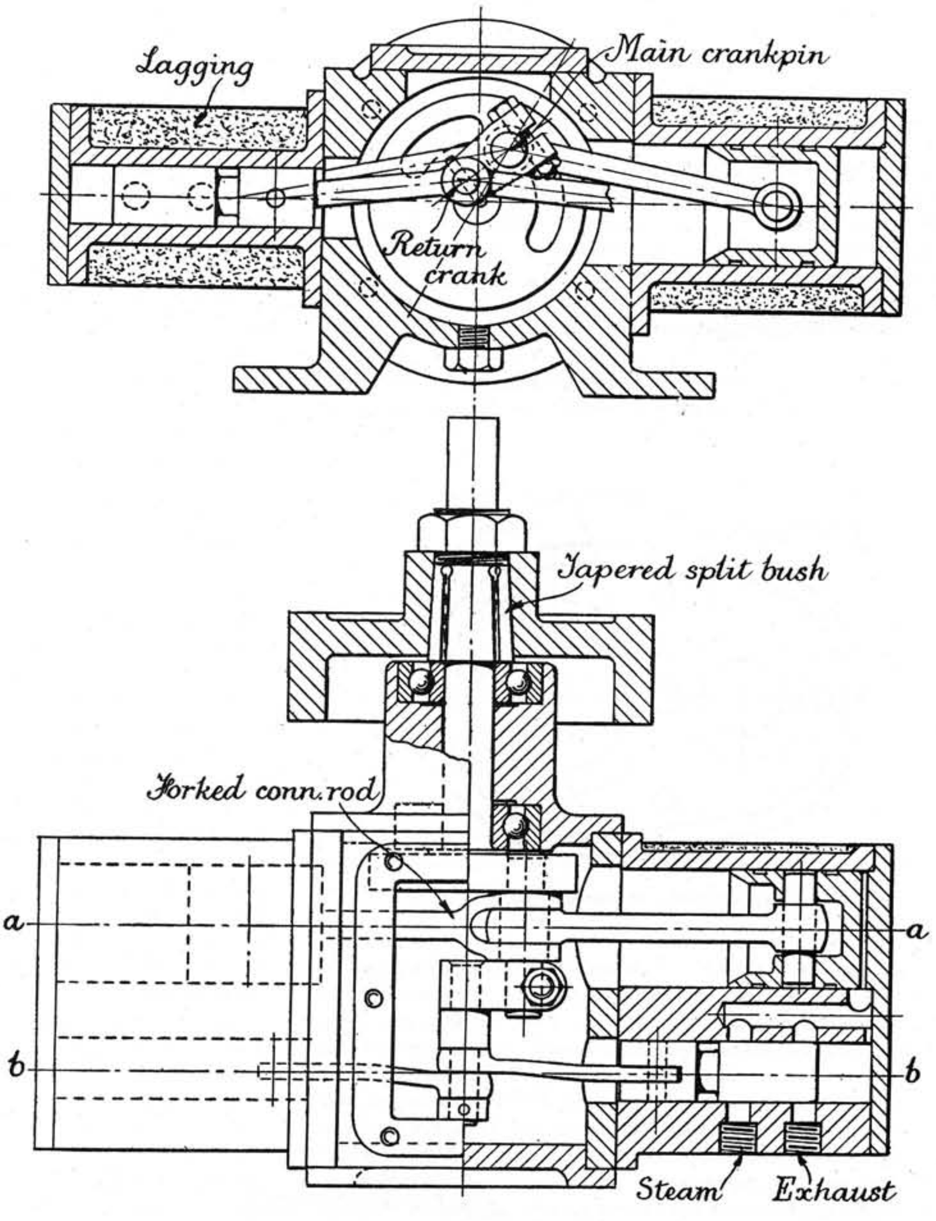

Fig. 2. Sectional end elevation and plan of engine. Right hand side of elevation sectioned on line aa and left hand side on line bb. In plan view, piston is shown at end of stroke, and piston-vave in mid-position to simplify drawing. Scale: full size.

It will be noted that an engine of this type, with a single-throw crank operating both pistons, does not possess the property of dynamic balance which is possessed by a horizontally-opposed engine, in which the pistons are moved in opposite phase by means of a two-throw crank. While this is a valuable feature, in fairly large engines, and reduces running vibration at high speeds, there is very little advantage in it for a small model, and it would, also, result in simultaneous power strokes on the two cylinders, with less even torque than the present arrangement, in which the power strokes are alternate at 180 degrees.

The speed of this engine is flexible within a very wide range, but it is, of course, not so well suited to pulling at low speeds as a double-acting engine, and the lowest speed at which it will perform, comfortably, is about 1,000 r.p.m. At present, there is a tendency, with cruising model power boats, to use smaller propellers, running faster than has formerly been usual, as this practice results in smaller torque reaction, with a resultant improvement in steering. With a well-made engine of this design, a propeller speed of 6,000 r.p.m. at 75 to 100 Ib. steam pressure is fully practicable without hammering the engine to pieces; but such high speed is only necessary, or desirable, in a fast cruiser, and would only promote a tendency to cavitation in boats running at less than ten or twelve miles an hour. The matter of selecting the best propeller speed to suit the characteristics of the hull employed is a very important one, which, in the writer's opinion, is not generally given the attention it deserves. A good deal is said about the pitch of propellers, but, in many cases, varying the pitch is less desirable than altering the diameter, so that the propeller speed is increased or decreased, to suit the hull. The reason for this is that it is usually found that optimum propeller efficiency is obtained with one particular pitch, and any variation above or below it results in increased slip.

One great advantage of placing the engine horizontally, in a model power boat hull, is that the centre of gravity is kept down, practically to the level of the shaft line, and thus promotes stability; also, that in hulls having a low freeboard, the engine can be kept entirely below the deck line, and is thus much better protected than a vertical engine from spray or cold draughts, which cause condensation or steam and lower efficiency.

Engine Construction

The crankcase of the engine is made from an aluminium casting, which, in common with most of the other components, is quite a simple machining job. It can be gripped either externally in a four-jaw chuck, or internally over the jaws of a three-jaw chuck, for facing the end, and, at the same time, either all or part of the inside can be bored. The end thus machined should receive the main bearing endplate. It is then reversed and held in the same way, as truly as possible, for machining the other end. Dead accuracy is not important, so long as the main bearing end is used as the reference face in all subsequent operations. Thus, when facing the sides to form the cylinder seatings, the casting should be held on an angle-plate by a bolt through the bore, with the reference face against the plate. The joint surface for the top inspection plate may be machined in similar manner, and a cut also taken across the feet of the casting, to ensure a true mounting-face when fitting the engine to its bearers.

The main bearing endplate may be made from a casting, or from a piece of aluminium alloy bar, 1 5/8" diameter. It is drilled centrally to a clearance fit for the shaft, and the ball-race housing bored to take the race a snug push fit. Note that the back of the recess is relieved in the centre, to form a clearance for the inner ring of the race. The inside face of the endplate and the joint-flange are faced at the same setting, and the spigot turned to a tight push fit in the bore of the crankcase. A pin mandrel is then turned in the chuck to fit the centre hole of the endplate, and the latter pressed on it for machining the outer ball-race housing, and turning the outside. Four holes in the bolting-flange, and a single hole drilled and tapped into the central hole, to take a lubricator, complete this part. The inspection-plate and the front crankcase endplate are simple machining jobs, which call for no comment. Incidentally, it will be seen, in the photograph, that the original engine is not fitted with an inspection plate on the top of the crankcase; but both Mr. Blakeney and myself are agreed that it is a most desirable fitting, particularly for access to the motion when assembling.

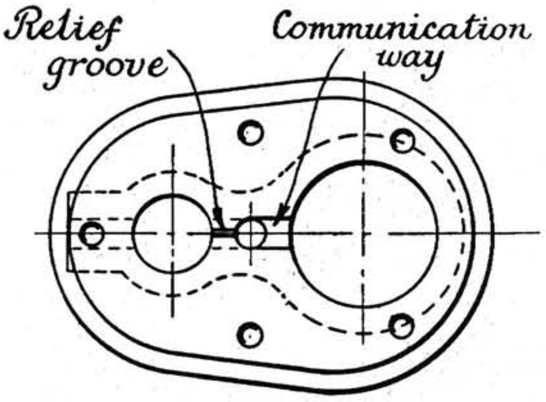

Fig. 3. End view of cylinder-block.

The crankshaft may be made from the solid, or built up, as desired; but, in the latter case, care should be taken to ensure a strong and rigid connection between the shafts and the disc. They may be made a tight press fit, and afterwards riveted over, and this will prove satisfactory, if really well carried out ; but some readers may prefer to braze the joints, which is better, but will call for a good deal of skill, particularly if subsequent machining is to be avoided. It is desirable to allow for turning the main shaft, at any rate, as the fit of the latter in the ball-races is important. They should be a light driving fit on the shaft, and, if standard 1/4" steel rod is used for the latter, it will, probably, be found that, when the scale is cleaned off after brazing, it will be on the slack side. A plain bearing is, of course, practicable for this shaft, but, if employed, the housing should be made at least 1/2" longer, and two well-fitting gun-metal bushes, not less than 1/2" long, with thrust flanges, pressed in from either end.

A portion at the end of the crankpin is turned down to receive the web of the return-crank, and it is of the highest importance that this should be well fitted, as any sloppiness will make it almost impossible to secure this crank properly, with the result that it will wobble about and upset the timing. It is secured to the pin by a split clamp, with a 6 B.A. bolt passing through it, which partly intersects the pin, and thus acts as a key. The objection may be raised that it is not desirable to key the return-crank, but that latitude should be allowed for adjustment. It is, however, pointed out that shifting the return-crank is by no means the same thing as shifting an eccentric, as it would result mainly in altering the travel of the valve, rather than its phase. This can only be done by altering the length of the return-crank. Incidentally, the latter may be cut from the solid, or built up in the same way as the main crankshaft.

Cylinder-Blocks

These are in iron, and are, also, quite simple to machine. The bottom flange, forming the cylinder seating, should be used as the reference face for machining operations. Clamp the casting, either in the four-jaw chuck or on the faceplate, with the surface outwards, to face it and bore the cylinder, and then reverse it and clamp the base flange to the faceplate, for facing the top and boring the piston-valve chest. The boring operations should be very carefully carried out, to ensure circular and parallel accuracy. Reamering is practicable, if a really good reamer is used, and only about two or three thousandths of an inch left to be removed by the reamer. The bores should, finally, be lapped, using a soft lap and fine carborundum, which must be scrupulously washed out afterwards; this operation should be done before drilling the cross-holes, which are sure to trap particles of abrasive otherwise. Drill the steam passage between the bores, and chip out the communicating-way to the cylinder bore, and a shallow relief groove with a fine round-nosed chisel. The positions of the cross-holes should be very carefully marked out, the steam port being 11/16", and the exhaust port 11/32", from the outer face of the block. A slight final lapping, with a very mild abrasive, may be necessary to get rid of burns formed by drilling through the piston-valve bore.

The cylinder-covers are made from 1/8" steel plate, machined back 1/32" on one face to form a spigot, fitting into the cylinder bore. If the joint surface is accurately machined, only a very thin paper joint will be necessary to maintain steam-tightness with the five studs, as shown in the end view of the block in Fig. 3.

The pistons are of cast-iron, and may be packed or fitted with rings, if desired, but, for minimum friction at high speed, plain pistons, very closely fitted, are to be preferred. Shallow packing-grooves turned in them will assist sealing, and retain lubricant. Gudgeon-pins, 3/16" in diameter, and about 1/32" under 5/8" in length, are made a light driving fit in the piston cross-holes, and, as a precaution against their working loose and scoring the cylinder-walls; a touch of soft solder on each end of the pin may be used to form a protecting pad.

For the piston-valves, an excellent material is "Staybrite" steel, but this is rather difficult to machine without special tools. Ordinary mild steel is not very suitable, as it may rust and become almost immovable, after the engine has been stopped for some time. Hard German silver or bronze rod is, perhaps, the best metal to use, under the circumstances. Neither the pistons nor the piston-valves should be lapped into their respective bores, but may, with advantage, be lapped with soft ring-laps, to remove superficial inaccuracies, or relieve tightness.

If any doubt is felt about the accuracy of dimensions in machining the rods and other components, the steam groove in the piston-valve, and, also, the exhaust closing edge at the end, can be marked off through the ports when the engine is assembled and timed. It may be mentioned that a plain hole drilled through the piston-valve, to line up in the full open position, is quite as effective as a groove for admitting steam, but is not considered correct practice.

Both connecting- and valve-rods are made from gunmetal, and, beyond care in ensuring that the holes at either end are the correct distance apart, and quite parallel both ways, call for very little machining. The jaws of the forked rod may be filed to fit over the opposite big-end, but the time taken in setting up both rods, to machine the side faces, is well worth while.

The only other component of the engine to be described is the flywheel, which is a straightforward job, and should be machined at the back and bored at one setting. The taper of the bore should be about 10 degrees included angle, and 3/8" diameter at the small end. For machining the outer diameter, front face and boss, the flywheel may be mounted on a taper mandrel, or upon its own collet, when the latter has been turned externally, and before parting off. The bore of the latter must, of course, be quite true and concentric, and should be a neat push fit on the shaft. It is screwed 3/8" fine thread over the parallel portion at the end for the draw nut, and the tapered portion is then slit either three or four ways. The flexibility of this bush is much improved by drilling holes at the termination of the slits, as shown in the drawing.

When the engine is assembled, the cylinder-blocks are lagged with asbestos fibre, and covered with thin sheet iron, which may be wrapped round with a wide lapped joint, and held in place by the steam and exhaust union stubs, holes being drilled in the lagging wrapper to accommodate them.

Timing

This is really quite automatic, if the engine is made to correct dimensions, and the return-crank is assembled so that its crankpin-centre describes a circle of $\frac{1}{4}$" diameter. This can be ascertained before forming the half-round groove across the main crankpin, to accommodate the clamping-bolt. It should be noted that the return-crank, as shown in the drawing, is set for clockwise rotation (from the end viewed; anti-clockwise from the flywheel end), and, to reverse the direction of rotation, the crank must be swung about 40 degrees downwards, so that its pin again describes a $\frac{1}{4}$" circle, but on the other side of the main crankpin. The basic rule to observe, with this valve-gear, is that the return-crank (or eccentric, if preferred) must follow the main crank at an angular distance of 90 degrees, minus the angle of advance, which, in this case, is 30 degrees. Such a large angle of advance is rather unusual, but is necessary for high-speed running with reasonable economy of steam. If it is desired to improve slow-speed running and ease of starting, the angle of advance may be reduced by lengthening the return-crank arm. The normal length is $\frac{9}{32}$" (between pin centres), and, by increasing this figure to $\frac{5}{16}$", the angle of advance is reduced to approximately 15 degrees. It is thus evident that there is a good deal of scope for experiment with this simple gear, and, while an ordinary eccentric is very much easier to adjust within any limits, it is far more likely to be set haphazardly and indiscriminately than the return-crank.

The timing diagram, set out in terms of crank angle, is shown in Fig. 4 (a), which shows the normal timing, with 30 degrees angle of advance, and the effect of retarding the angle of advance to 15 degrees is seen in Fig. 4 (b), the valve and port dimensions being the same in each case. It will be noted that the normal timing gives an appreciable compression period (roughly, 6 per cent of piston stroke), which, while having a beneficial cushioning effect at high speed, makes rather rougher running, at slow speed, and starting may be a little more difficult if there is the least trace of water in the cylinder. The expansion period is, approximately, 15 per cent of the stroke. An engine will always start up more readily, and will, apparently, run more smoothly at moderate revolutions, if timed as at (b), in which the compression period is negligible, and the steam acts on the piston for a longer effective portion of the stroke. The expansion period, while the same in the angular sense as before, acts for a shorter period of the stroke (about 12 per cent), and the later release of the exhaust definitely retards high speed. In order to obtain comparable power output with the retarded timing to that of a normally-timed engine, it would be necessary to reduce the steam lap, which would thus increase the steam admission period, and shorten the expansion period, thus lowering the economy. The reasons for timing the engine, as shown at (a), should thus be apparent, but the reader is given the choice between this and the far more common method, so that he can please himself which he uses.

Incidentally, many builders of high-speed steam engines make a practice of increasing the exhaust period by the use of negative exhaust lap, but this expedient is not recommended, and the exhaust port of this engine is timed to open at exactly mid-stroke of the valve. If the exhaust cannot clear itself in a full half-revolution of the engine, there is, in the writer's opinion, something radically wrong with the exhaust-pipe system.

Whatever timing the constructor decides to employ, it is possible to mark the piston-valves, after assembly, by means of a thin sharp scriber, inserted in the steam and exhaust ports, placing the crank in the appropriate position for each event, and making quite certain that the scriber is applied to the right edge of the port in each case; that is, the closing edge, which, in the case of the steam port, is the edge nearest the base flange, and, for the exhaust port, that nearest the cylinder cover. Note that the timing diagram is positioned as for a vertical engine, and that the terms 'top dead centre' and 'bottom dead centre' have been used, in preference to the more correct steam engine terms 'inner' and 'outer' dead centres, as the latter are considered liable to misinterpretation, in an engine of this type. Some pains have been taken to describe the timing in detail, as the writer regards this as one of the most important factors in the efficiency of small engines, which is, however, very imperfectly understood by many constructors.

Lubrication

It has been mentioned that provision is made for a lubricator on the main bearing housing. This may be of the sight-feed, or drip, type, but, as its principal function is to 'lubricate' the ball-races (or, more logically, to protect them from water, which would set up rust, as ball-bearings do not require lubrication in the usual sense), there is a good deal to be said for the use of a grease-cup, to take a semi-solid lubricant and force it positively through the races, keeping them 'packed', so as to exclude moisture. Oil is, however, required for the internal mechanical parts, and it is, therefore, advisable to fit another lubricator to the inspection plate of the crankcase. An excellent type, for this purpose, would be a 'syphon', or wick-feed oil-cup, with the wick just long enough to wipe the crankpin bearings as they come around, without obstructing them, so as to set up friction. In this way, oil would be fed to the parts which really require it. There is very little point in pouring a supply of oil into the crankcase, as, for one thing, it will only set up drag at high speed, and the moving parts will just 'cut a hole' in it without picking any up; also, the inevitable condensed water which creeps past the pistons will churn up into an emulsion of dubious lubricating quality, and definitely no good for ball-races.

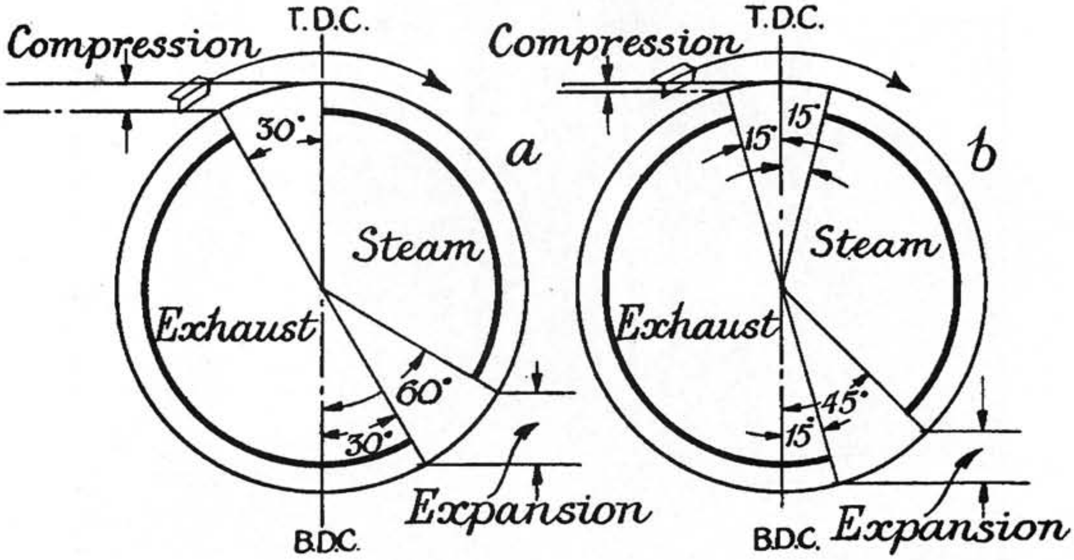

Fig. 4. Timing diagram as recommended for high speed, with 30° angle of advance (a); and modified timing for moderate speed obtained by retarding angle of advance to 15° (b).

April 14, 1938

In the early beam engines there was a considerable amount of timber employed so the model maker had to master other skills and techniques to make a successful model. Not only this but he has to age both wood and metal to achieve a lifelike result. I think you will agree that Mr. Wilson's model was fully deserving of his Silver Medal and the hints and tips given in the article are of use even today.

A Model " Watt " Rotative Engine

A Silver Medal Winner at the 1937 " M.E." Exhibition

By J. G. WILSON

THE building of this model was an attempt to portray the type of engine built by the firm of Boulton & Watt, during the period 1788-1790, and every effort was made to obtain correctness of detail, both in the mechanical design and the finish of the model. In the following notes, I will endeavour to explain, in a general way, how the required result was obtained. It would, of course, be impossible, in the space of one article, to give detailed information on the construction of the model. The main source of information was a book entitled "James Watt and the Steam Engine," by H. W. Dickinson and R. Jenkins. This is an excellent book, and can be recommended to all who are interested in the work of Watt, particularly model makers, since numerous scale drawings are given. Smile's "Life of James Watt" and several other books were consulted, and a certain amount of information was obtained from the Science Museum, in South Kensington.

It should be emphasised that this is not a model of any actual engine, since no complete sets of drawings were available, so that the only thing to be done was to build a hybrid type, fitting into the required period. This involved a good deal of research work, most of which was done before any of the building was started; and, apart from minor changes, the model was built according to the plans so formed.

A convenient scale (1 inch to 1 foot) was chosen, and the main frame was built. All the woodwork is of oak, held together by straps and square-headed nuts and bolts. A large number of the latter were required, since no hexagon heads or nuts are permissible. The square heads were made by filing down the ordinary type, while many of the square nuts were made by drilling and tapping strip material, as shown in the sketch (Fig. 1). After several experiments, the ageing of the woodwork was done by simply charring it in a gas flame. This gives precisely the result required, and is very little trouble.

The cylinder and its covers were the only castings used, these being obtained locally, from the writer's own patterns. Most of the remainder of the ironwork was built up by brazing, or soft-soldering. For small one-off jobs, this is the quickest and cheapest method.

The parallel motion is of the usual type, the links being filed out of the solid. It should be pointed out that pin-joints in the motion, valve-gear, and governor are over-scale, since the model was built to work, and the

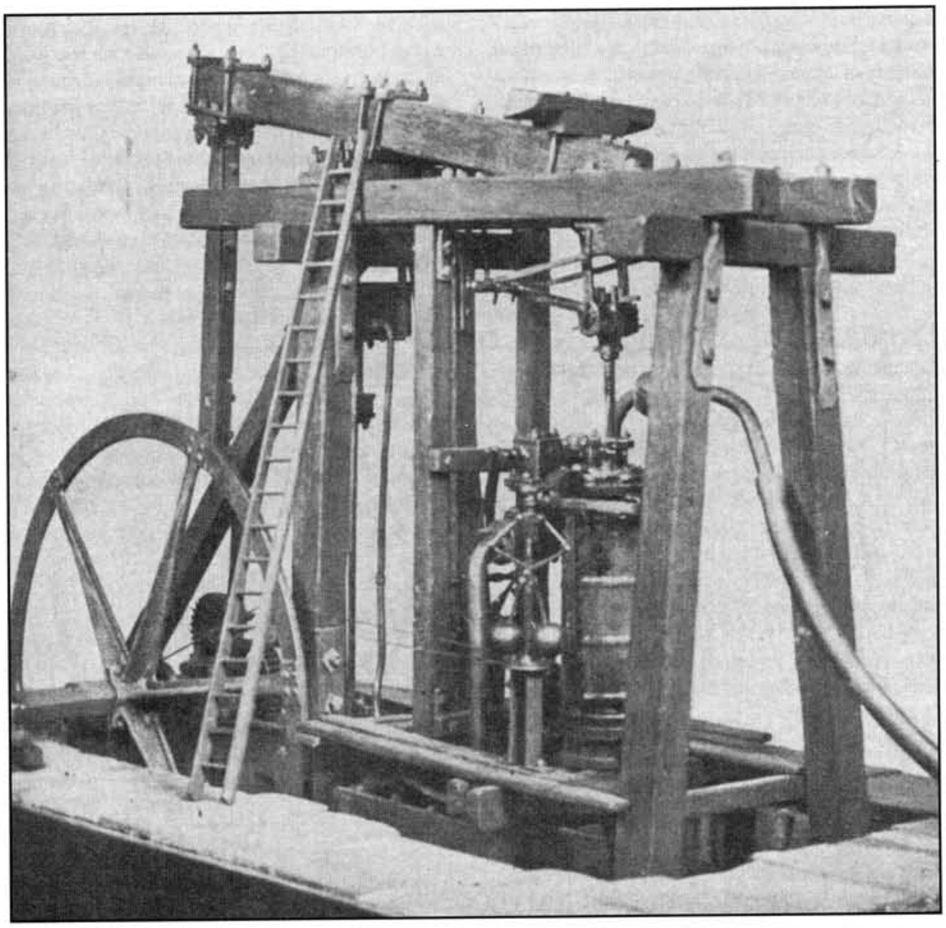

Mr Wilson's 1" scale model of a "Watt" Rotative Engine.

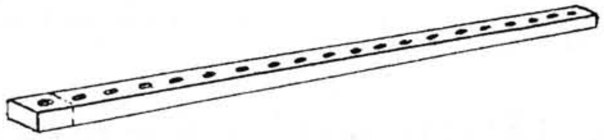

Fig. 1. Steel strip tapped and sawn off as required for square nuts.

life of scale-size pin-joints would be short.

Actually, the engine has done about one hundred hours of running on compressed air, during the Lincoln Club's Exhibition.

The valves are of the type shown in the sketch (Fig. 2), and are operated by handling arms moved by stops, or 'chocks', on a vertical rod, termed the plug-tree, which, in turn, is moved up and down the main beam. This gear is very fascinating to watch, when the engine is running, but it has the disadvantage that admission is for the full stroke, with no expansion. This causes a fair amount of shock at the ends of the stroke, and, since the 'flywheel effect' is low, due to the wheel itself being true to scale, the model has to be run somewhat faster than one would like.

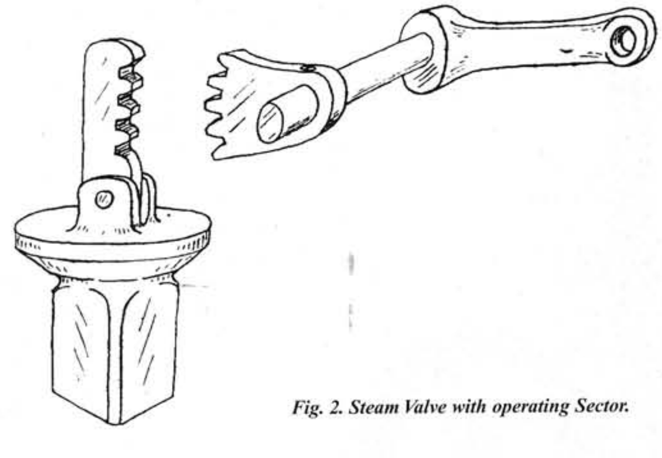

Fig. 2. Steam Valve with operating Sector.

The flywheel was built up as shown in Fig. 3, spokes being T-iron brazed to boss and rim joining pieces. The finishing of the ironwork presented a problem. Nuts, bolt-heads, straps and the like were simply rusted with sal-ammoniac, but built-up parts which were to simulate cast-iron, obviously, needed different treatment. A few experiments were made, and, finally, the following method was adopted. The parts were first coated with a mixture of iron filings and black varnish. When dry, a light rub-over with emery-cloth served to expose some of the filings, which were then rusted with sal-ammoniac. In this way, a rough surface of exactly the right type was obtained, and it was possible to imitate cast-iron on any metal. For instance, fillets left when brazing or soldering were entirely hidden, and built-up parts looked exactly like castings.

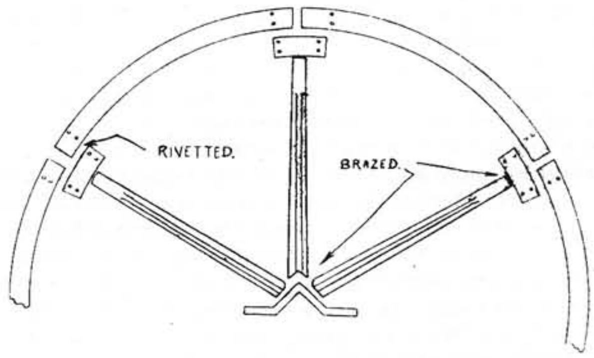

Fig. 3. Built-up flywheel.

The engine stands in a pit, which is lined with stones of scale size, set in cement on a wooden backing, with nails and wire for reinforcing. There are some hundreds of these stones, and a fair amount of time was spent in bricklaying. The surround to the engine, at ground level, and the floor of the pit are covered with slabs made by carefully splitting-up larger pieces of stone. The ageing of the stonework was done with turpentine, darkened with a little black paint, touching-up being done with black and green inks, the latter being judiciously applied to imitate the green on stonework under damp conditions.

The whole job took about two years to complete, and, judging by the kind comments of many who have seen it, the writer's efforts to convey the spirit of the early beam engines have been successful.

December 15, 1938

New Tools and Supplies

The New "Sirius" Engine

A NEW twin-cylinder engine model, for ordinary or flash steam boilers, has just been introduced by Messrs. Stuart Turner, Ltd., Henley-on-Thames. The cylinders are 1" bore by 1" stroke. It is, generally, of a similar type to the "Sun" engine, which has proved so popular, but develops greater power, and embodies a number of improvements and refinements in design. The weight of the finished engine is 6½ Ib., the height is 6", length of crankcase 5", and the width over the feet is 4¼". Particular attention has been given to the design of the valve-gear and steam passages. Finished engines, or sets of fully machined, or partly machined, castings and materials can be supplied. Where the machined cylinders are ordered, the bore is now finished by a special lapping process which produces a remarkably smooth and accurate bore. The working drawings supplied are particularly clear and complete.

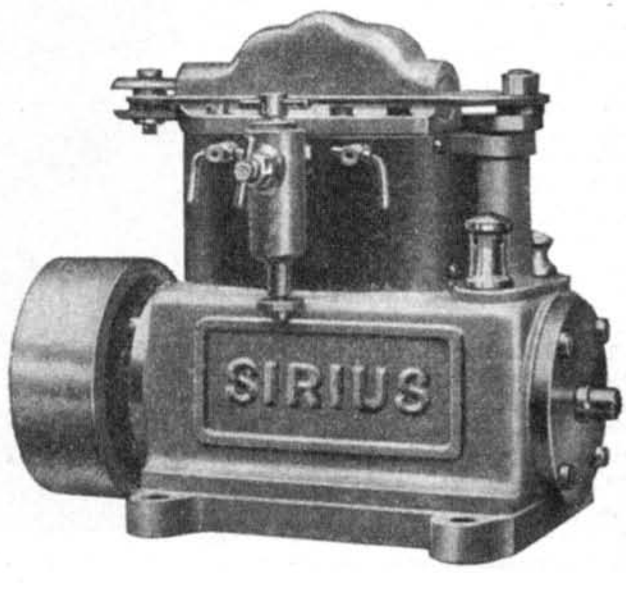

December 8, 1938

How often have you heard "I can't make that I haven't a mill/shaper/grinder etc". Here we have an award winning model that was built without lathe and only a hand drilling machine. The final truing of the flywheel being carried out on a gramophone turntable. Confronted with work like this how can any present day model engineer complain?

A Table Engine Made Without a Lathe

Awarded the "Buckmaster" Prize at the "Model Engineer" Exhibition

By J. T. FOXON

IN beginning these few notes, I would like to say this is the first model I have made. I have lived abroad a good many years and have not been in a position to do any model making until last year. I have been a constant reader of The Model Engineer, and when this model was described in August, 1934, I was very fascinated with it. I have often thought it could be made without a lathe, but have not been keen enough to make a start on it; then The Model Engineer announced the very generous prize offered by H. F. Buckmaster for a model made without a lathe; I was determined to put my idea into practice.

Having only a hand drilling machine and the usual array of files, etc., I had to do a lot of thinking before starting, as each part had to be made in my mind so that no snag should occur as the work proceeded. Castings were out of the question, so I decided to make all the parts from stock material. I figured the flywheel was the most difficult part to make, and if I could make a success of this I could complete the rest of the model, so a start was made on this. The rim is a ring forging, 9/16" square in section. This was filed flat on one face, and trued on a sheet of glass. The other side was then filed to ½" thickness. The ring was next marked out and filed inside and out, to the lines. It was finally mounted on a gramophone turntable for truing, and filed until it ran true.

The six spokes were cut from 3/16" x ½" steel to a template, pegged through the wheel rim and a clearance hole left in the centre. Then two ⅛" x 1" dia. washers were drilled a fit for the shaft and six 3/32" holes drilled in each, and also through the spokes. These were bolted each side of the spokes with three 1/16" bolts, and the wheel set to run true on the shaft. The other three holes were then opened out to ⅛" and driving fit rivets put in. The bolts were then removed and these holes also riveted. The wheel ran dead true when finished, so I decided to carry on with the other parts.

The table sides were cut from ⅛" steel plate; the beading riveted on. The corners are formed from 3/16" square steel, the top plate was cut from 3/16" steel plate. The crankshaft was made from ⅜" silver-steel and silver-soldered. The shaft bearings were made from 5/16" x ¾" steel, brasses fitted with caps and oil cups. The eccentric-sheave is built up from a piece ¼" thick, cut from a 1" dia. steel rod, and two 1/16" flanges riveted on; the strap was made from a piece of ¼" cast-iron with a steel eccentric-rod.

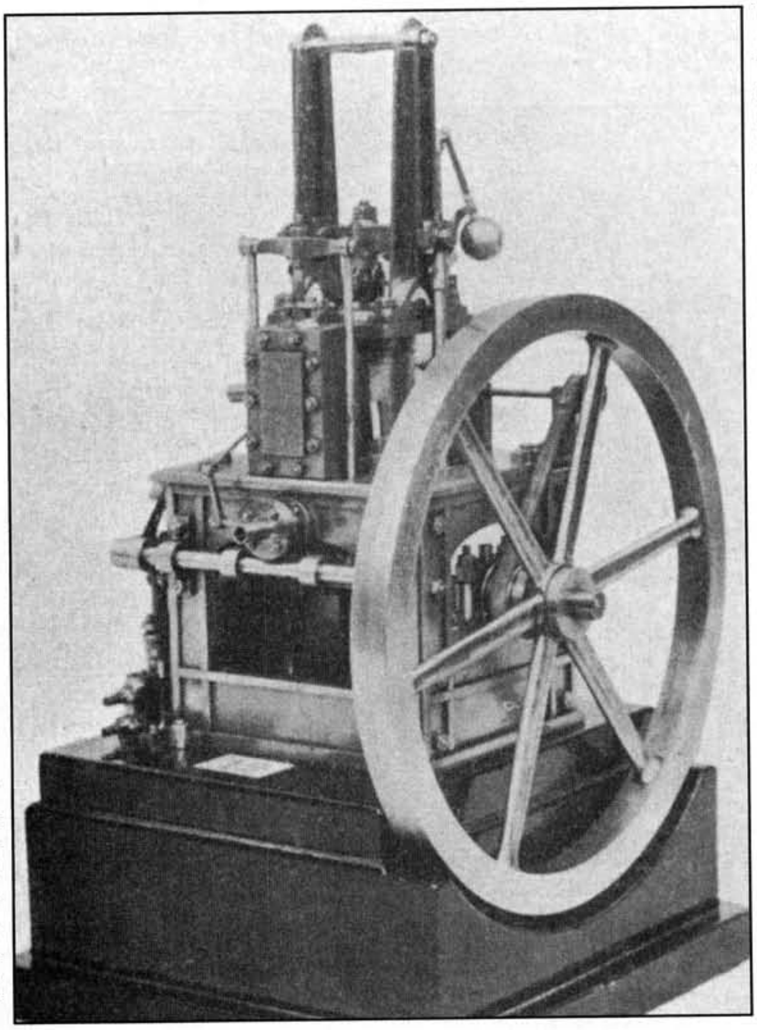

A first attempted at model making without a lathe.

The cylinder is made from a piece of iron piping, filed down, top to bottom, to take the 3/16" steel plate flanges. The steam-port section was filed to shape and fitted, then the ribs; and, finally, a 1" dia. steel tube liner put in, an easy fit. The parts were tinned, and, after pegging and truing up, the whole lot was sweated over a gas-ring, and it turned out a very nice job. The ports, etc., were then drilled and studs fitted. The steam-chest is made from four pieces of ¼" x ½" steel, pegged and sweated. The piston called for a lot of patient work; it is made up of three pieces of steel, ⅛" x 1" dia., and two pieces, ⅛" x ⅞" dia., screwed on to the piston-rod, and a nut locking same. They were filed true, then ground into a 1" tube with coarse emery-powder, and finally ground into the cylinder with flour emery. Two rings were cut from the 1" tube and split for piston-rings. The top cylinder-cover is made up of three parts to form the stuffing-box; the spigot, which is ¼" thick, was made a slack fit in the cylinder. The piston was then put in the cylinder, and when the best working position was found, the stud-holes were marked in the cylinder-flange, thus making a nice working piston.

The guides, crosshead, connecting-rods, etc., need no comment, as they were straight-forward jobs. The governor-gear needed a lot of thought and patience; I made three sets of bevel-gear wheels by hand, but they were not to my liking so I had to buy a pair; these are the only machined parts on the model. The feed-pump is built up from gunmetal strip, ½" x ¼", and fitted with ball-valves.

The model, when completed, worked perfectly on 20 lb. air pressure. I might add I enjoyed every minute spent on making it, and have been amply rewarded for my work. The principal dimensions are: Cylinder, 1" bore, 1¾" stroke; flywheel, 7" dia.

In conclusion, I would like to give a little advice to model makers who do not possess a lathe. Do not attempt making a similar model unless you are expert with a file, and, most of all, possess an extra amount of patience, as these gifts are the deciding factors in the making of a successful model.

November 24, 1938

J. C. Crebbin (Uncle Jim) was a leading light in the hobby from the very early days. His main interest was miniature steam locomotives and these were seen at many M.E. Exhibitions (even today as "Cosmo Bonsor" it is often seen on the SMEE stand). Uncle Jim was a great experimenter and was interested in compounding and often his engines would suffer major rebuilds as another idea took his fancy.

Model Injectors

By J. C. CREBBIN

IT was interesting to read the remarks of "L.B.S.C." and "Churchwardian" on the above subject. One of the first "Vic" types made was tried on my original single 2-cylinder compound, in 1900-1901; the injector was named the "Eaton", it had a curious final cone with small holes drilled round the intake. After a few adjustments were made, it was returned for observation. It was this injector which was fitted to "Cosmo Bonsor", and was sufficiently reliable for me to discard hand pumps on my model locomotives.

I believe Mr. Greenly was responsible for the type being produced by Messrs. Bassett Lowke. One of these was re-constructed by me with a threaded steam-cone, so that this could be adjusted. It was this injector which made "Cosmo Bonsor" popular as a 'stand by' loco. at fetes, etc.

Then came the "Lea" injector, with a flap nozzle, which, as Mr. Lea demonstrated to me, worked exceedingly well, and those on Mrs. H. Jacques' 4-4-0 N. Eastern 2" scale were very efficient; they had a moving steam-cone, adjustable from the footplate.

Those made by Messrs. Carson were never satisfactory, because they were never dry at the overflow. Mr. Carson assured me that the drawings supplied by Mr. Lea were not the same as the latter's most successful type. As a result, Mr. Carson stopped production of injectors. At the time of Mr. Lea's death he was constructing a small injector to be tried on "Aldington", but, curiously enough, after his decease it was found that all drawings had been destroyed and no injector or parts were found in his workshop. Apparently, he had destroyed them all for reasons best known to himself.

"L.B.S.C." has done much to bring injectors up-to-date; credit must also be given to Mr. A. S. King for the splendid Liverpool Castings productions. Then Mr. Ferreira's "Cert" came on the scene, and has proved very popular.

However, all these injectors were of the non-lifting type and all relied upon the water flowing through the body before steam was turned on. It has been my privilege to witness the experiments which have led up to the "Fool Proof" injector for models, the producer being that clever amateur, Mr. E. J. Linden, who was responsible for that magnificent ¾" scale 4-cylinder L.M.S. "Pacific", which was demonstrated working on the L.M.S. track at the recent Exhibition. This piece of work was considered one of the finest in the Exhibition, hence the presentation of a Silver Cup.

The "Fool Proof" injector is almost uncanny; it puts in about 1 pint of water per minute, and works from 100 Ib. to 40 Ib. without any water adjustment. In tests, as wide a range as from 110 Ib. to 35 Ib. was obtained, with water adjustment. Its lifting powers are remarkable - water was lifted 3' below the injector and put into the boiler. Of course, the range, when lifting, is not so great as when feeding at about injector level. It does not matter whether the injector is hot or cold. In the tests it was heated above the boiler temperature, also the clack-valve was made to leak back badly, but it made no difference.

When feeding, the indiarubber water pipe was pinched, thus breaking the flow; when the pipe was released, the water immediately went into the boiler without any dripping from the overflow.

When water was fed at just below or above injector level, steam could be turned on first, and, as soon as water was turned on from the tank, the injector would feed the water immediately without any loss through the overflow.

Tests were made as to the vacuum created by this remarkable little injector, and as much as 13" was recorded, the average being 12".

November 24, 1938

I was going to finish this volume with a picture of a championship cup winner but in the end decided against it and instead feature one of the unsung model engineers who labour each day for the love of the hobby. Of Mr Oddy we know little, and where his engine is I know not, but he is typical of the thousands of model engineers that have made the hobby the great leisure interest that it is.

The " M.E." Exhibition Cup Winners

5.-Mr. Harold Oddy and his Model Beam Engine

I HAVE been asked to write a few lines concerning the model beam engine which has been awarded the cup given by Mr. Stevens at the recent Model Engineer Exhibition. Perhaps it would be advisable, first of all, to give a brief account of the inspiration of the model.

During the course of my apprenticeship with Messrs. Hick, Hargreaves and Co., Bolton, I was sent along with two journeymen to carry out repairs to a pair of beam engines of the Wolfe type, constructed by the above firm in 1854, and driving a Rochdale mill up to 1926. The design, in general, followed that of the period which allowed the pattern makers and moulder to give to the C.I. parts a classic finish. This, coupled with the fact that the engine had run for so many years and was indicating over 1,000 i.h.p. decided me, should I ever have the opportunity, to make a model of this type of engine, and try to embody in a simple manner the principal features.

Mr. H. Oddy (Bolton)

A stroke of 3" was decided, and length of beam 9", i.e. three times the stroke; con.-rod also 9" centres. The Hick engine had a stroke of 8' 0", beam centres of 24' 0". Working on these lines for proportions, I made a general arrangement drawing, from which the various parts were proportioned, paying full attention to the detail work which is necessary for distinction. I had the patterns made by various joiner friends, and the castings which are chiefly C.I. were made at local foundries in Stockport.

The parallel motion, links, and governor details were cut from the solid, and all the bearings, etc., were fitted with brass steps and made adjustable. The cotters were made from 1/16" bright steel. The cotter ways were made by drilling a series of 1/16" holes and breaking through these holes by a small round - nose chisel, and afterwards trued up by a Swiss file.

The C.I. flywheel is built-up. Great care was necessary in drilling the holes for the eight arms to ensure these being correctly spaced and in line. After cottering-up, the spider was trued up in lathe, and pressed into a rim I had previously bored out. The airpump is fitted with rubber foot-valve, and ball-valves are used in bucket and delivery-valve, also feed pump. The governor works a butterfly-valve in steam chest and stop-valve requires 14 turns to open.

Summing up, the desired result was to make a working model yet true to general detail. With this object in view the foundation required much thought, as I wanted to give the effect of solid stonework and yet allow the working parts to be seen. The engine took about two years of leisure time to make. I rigged up a wooden shed 8' 0" x 6' 0" for a workshop, and apart from a vice and hand drilling machine, 1/2" dia. drill, my chief tools were small files.

A Friend's Help

I was indebted to a friend in Stockport, Mr. Witham, who kindly allowed me free use of his lathe, which I took advantage of about three nights per week for three months when machining the various parts prepared previously at home.

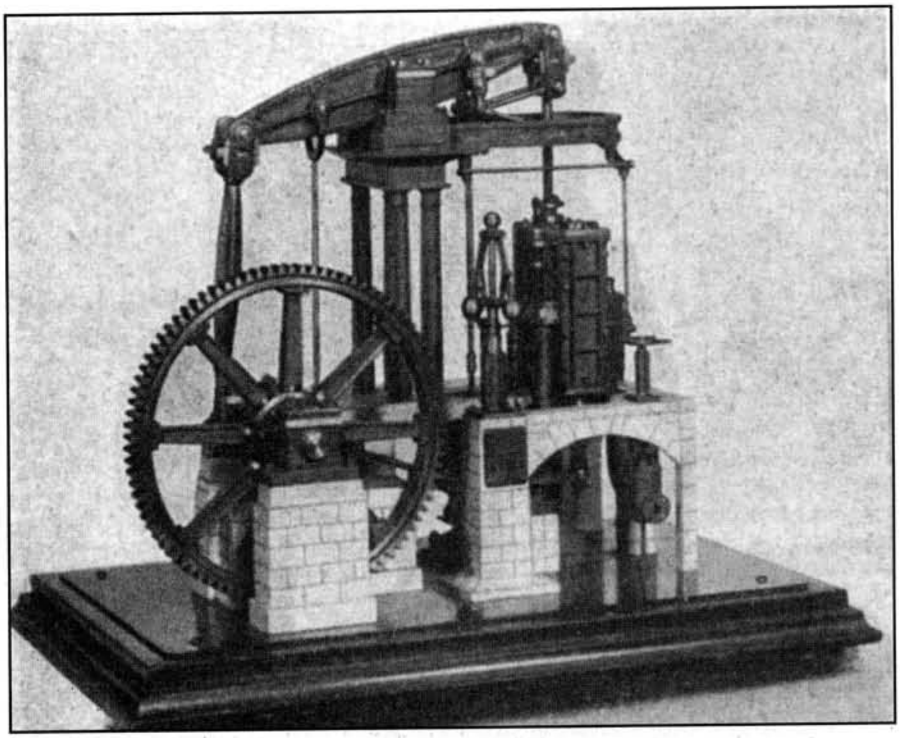

Mr. H. Oddy's model Beam Engine.

Being a Boltonian resident in Stockport, I could not resist inscribing under Stockport, "Supera Moras", the Bolton motto. This is the first model I have attempted, and I never seriously considered exhibiting. Being pressed by a number of friends to send it to The Model Engineer Exhibition, you can imagine how agreeably surprised I was on being awarded the "Stevens" Cup.

A number of designs published and described in the Model Engineer are available from various model engineering suppliers. The following list whilst not exhaustive gives a good idea of what is available.

Engine	Designer	M.E. Volume
Triple Expansion Engine	O.B. Bolton	155-157
Unicorn	E.T. Westbury	109
Cygnet	E.T. Westbury	109-110
Double Tangye Mill Engine	E.T. Westbury	110
Vulcan	E.T. Westbury	111-112
Theseus	E.T. Westbury	115-116
Perseus	E.T. Westbury	115-116
Beam Engine	Exactus	121-122
Small Marine Steam Engine	M. Evans	144
Piston Drop Valve Mill Engine	A. Haworth	144-145
Vee Engine	J. Haining	167-168
Spartan	E.T. Westbury	100
Suum Cuique	S. Bray	171-172
Opus Proximum	S. Bray	172
Tertium Quid	S. Bray	173-174
Diagonal Paddle Engine	E.T. Westbury	113-114
Twin Cylinder Marine Engine	G. Miles	175
Georgina	Tubal Cain	146
Warrior Mk II	J.P. Bertinat (E.T.W.)	146-147
Princess Royal & Goliath	Tubal Cain	October 1984
Trojan	E.T. Westbury	100
Launch Engine	S. Bray	155-156
Borderer	J.P. Bertinat	163-165
Pices II	R.B. Kirtley	166
Marcher	J.P. Bertinat	166-167

Engine	Designer	M.E. Volume
Mary	Tubal Cain	143
M.E. Beam Engine	Oliver Smith	143
Side Rod Engine	S. Bray	157-158
Tandem Compound	S. Bray	165
Double Tandem Compound	S. Bray	165-166
Trevithick's Dredger Engine	Tubal Cain	159-160
Dairy Engine	J. Haining	155-156 & 181-182
Compound Marine Engine	A.A. Leak	149-150 -151
Stuart Turner No. 1	Stuart Turner	164
Stuart Turner No. 5A	Stuart Turner	163
Stuart Turner No. 7A	Stuart Turner	163
Stuart Turner No. 9	Stuart Turner	141
Stuart Turner 10V	Stuart Turner	142
Stuart Turner Triple Expansion	Stuart Turner	164
Stuart Turner Sirius	Stuart Turner	168-169
Stuart Turner Victoria	Stuart Turner	154-155

MODEL ENGINEER SUPPLIERS

Blackgates Engineering
207/209 Wakefield Road
Drighlington
Bradford
West Yorkshire
BD11 1EB
Blackgates Engineering have been supplying model engineering requirements since 1976. Their catalogue lists a number of designs published in the Model Engineer over a period of years together with materials, tools and fittings to suit all model engineers.

Bruce Engineering
Hollow Tree
Penny Lane
Shepperton
Middlesex
TW17 8NF
Bruce Engineering has been involved in the sale of stationary engines for the last 20 years. They have most models in the Stuart range in stock. Alongside the Stuart range they stock a few designs of their own. In 1986 agreement was reached with Anthony Mount to market his range of early and unusual stationary engines. They stock a large range of fittings and pressure gauges and can supply boilers for most loco, marine and stationary engines.

Brunell Models
Maple Works
Northgate
White Lund Industrial Estate
Morecambe
Lancs
LA3 3AZ
Brunell Models supply a select range of stationary range drawings and castings, many described in detail in The Model Engineer. Some are designed with the beginner in mind while others are for the more experienced worker. In addition to stationary engines they stock a range of locomotive and traction engine designs some of which are not available elsewhere.

Camden Miniature Steam Services
Barrow Farm
Rode
Nr Bath
Somerset
BA3 6PS
Camden supply a very wide range of model engineering and engineering books including a number on stationary engines for the model engineer looking for something different. In addition they supply drawings and castings for a small number of designs, including three marine engines designed by the late Arthur Leak, one of which was described in The Model Engineer in the early 80's. A copy of their booklist, or details of any of these models, are available free on request.

Cheddar Models Ltd
Sharpham Road
Cheddar
Somerset
BS27 3DR
Cheddar Models specialise in the manufacture of model boilers of all shapes and sizes for locomotives, traction engines and marine purposes. They also supply a range of steam plants for use in radio controlled steam launches.

Christie's South Kensington Ltd
85 Old Brompton Road
London
SW7 3LD
Christies first began their now world famous model sales in 1966, under the direction of the late The Hon. Patrick

Continues on page 98

MODEL ENGINEER SUPPLIERS

Lindsay and Jonathan Minns. This was the first time a market place was made available to model engineers apart from advertisements in magazines such as Model Engineer. In the beginning sales were held in London then the British Engineerium and finally back to London at South Kensington, where they are currently held in conjunction with Scientific Instruments.
Often auction houses are perceived as 'takers', but over the years many model makers whose work has been ascribed to them by name in Christie's catalogues have been able to take up their skills on a professional and commission basis, and in this way Christies have been able to put back into the movement both encouragement and cash, and indeed some high prices have been paid, particularly for 19th century models.

Stuart Models
Braye Road
Vale
Guernsey
Channel Islands
GY3 5XA
The founder of the company, Mr Stuart Turner was associated with The Model Engineer from the very early days. In 1906 he founded Stuart Turner Ltd and there were nine models in the range. In 1991 Stuart Models underwent a change of ownership with production and sales moving to the Channel Islands. Stuart Models sell kits of castings with everything necessary to build the engine including all the materials, drawings, gaskets, everything down to the last nut and bolt. In addition premachined kits are available, these are complete sets of parts where everything is ready machined to be finished with hand tools. These kits are ideal for people who do not have access to workshop equipment. They also supply a large range of steam fittings, boilers, feed pumps as well as setscrews, nuts, bolts etc.

Lacy Scott & Knight
10 Risbygate Street
Bury St Edmunds
Suffolk
IP33 3AA
Lacy Scott & Knight are a long established firm of auctioneers. Since the late 1980's they have been holding toy and model auctions and they are now the largest of their type in the country. They have three auctions a year containing engineer built models and also model making equipment. The sales are an ideal opportunity to acquire or dispose of surplus models and tools. For further details contact Andy Thomson, Collectors' Toy and Models Department Manager.

Maidstone Engineering Services (Sales)
4 Larkstone Park
Lodge Road
Staplehurst
Kent
TN12 0QY
They supply all the basic needs for the model engineer including steel, brass and stainless steel in various sections. Copper sheet and tube for boiler making. They also carry a comprehensive range of fasteners, nuts, bolts and rivets. For both locomotives and stationary engines they carry a wide range of boiler and pipe fittings to cover pipe sizes from 3/32" to 1/4". The range of materials are available from the shop or by mail order.

A. J. Reeves & Co (Birmingham) Ltd
Holly Lane
Marston Green
Birmingham
B37 7AW
"Reeves" founded in 1947 has always been a leader in the supply of castings, associated materials and fittings and the range is ever increasing. In the stationary and marine engine lists there are now over 40, many of which have been described as constructional series in The Model Engineer. The 328 page catalogue lists all the castings available together with materials, tools, paints, lining transfers, drills, milling cutters and thousands of other items.

Southworth Engines
6 Kennet Vale
Chesterfield
S40 4EW
Peter Southworth's range of drawings and castings are based on the products of Robeys of Lincoln. Using cylinder diameters of 3/4" and 1.3/16" with a stroke of 1½" he has produced five different engine arrangements using common components. The drawings are full size with machining notes and constructional drawings for the difficult components included. A lathe of not less than 3½" centre height such as the Myford ML7 is required to machine the castings.

Nexus Special Interests Ltd
Nexus House
Azalea Drive
Swanley
Kent
BR8 8HU
The Nexus Plans Service lists many of the stationary engine designs published in The Model Engineer over the last fifty years. A S.A.E. will bring a copy of the list. The back number department can provide photocopies of constructional articles. Full details can be obtained from the same address.

HOME AND WORKSHOP MACHINERY

QUALITY USED MACHINE TOOLS

144 Maidstone Road, Footscray, Sidcup, Kent, DA14 5HS.

Telephone 0181-300 9070 – Evenings 01959 532199 – Facsimile 0181-309 6311.

Opening Times: Monday-Friday 9am-5.30pm – Saturday Morning 9am-1pm

10 minutes from M25 – Junction 3 and South Circular – A205

LIMITED OFFER!
ALL MYFORDS DELIVERED *FREE* UK MAINLAND

LATHES

BOXFORD TUD 4½" x 20" 3 jaw chuck, cabinet stand, hand feeds	Only £295
BOXFORD CUD 4½" x 20" model CUD, changewheels, 3 jaw chuck, cab. stand	£750
BOXFORD AUD 4½" x 22", gearbox, power cross feed, 3 jaw chuck, cabinet stand	Excellent Condition £1,250
BOXFORD CUD 5" x 22" MkIII, c/wheels, 4 way toolpost	As New £1,400
BOXFORD BUD 5" x 22" MKIII, c/wheels, power cross feed, T slotted cross slide	£1,400
BOXFORD AUD 5" x 24", (Imperial) gearbox, power cross feed, Dickson, Tools	£1,400
COLCHESTER BANTAM 1600 model, 5" x 20", geared head, power feeds, gearbox	£1,400
COLCHESTER STUDENT 6" x 24", square head, gap bed, gearbox, power slides, clutch	£2,250
COLCHESTER STUDENT 6" x 24", square head, gap bed, gearbox, power slides, ainjest screw cutting attachment	£2,250
COLCHESTER BANTAM 2000 Geared head, gearbox, 3/4 jaw chucks, Dickson tool post, gap bed coolant	£3,450
COLCHESTER CHIPMASTER 5" x 20", screwcutting, gearbox, power slides, 3 jaw chuck, Dickson toolpost, coolant, metric dials. Very nice	£1,850
COLCHESTER STUDENT 6" x 24", geared head, gap bed, power cross feed, 4 way tool post	£950
COLCHESTER STUDENT 6" x 24" 1200 (sq head) gearbox, well equipped	£2,550
COLCHESTER STUDENT 1800, 6½" x 40" models, 3/4 jaw chucks	£3,250
DRUMMOND Treadle Lathe round bed, 1 long series complete, very rare	£300
EMCOMAT 7 3½" centre height x 20", geared head, c/wheels, 3 jaw chuck as is, part ex	£550
EMCO V10P 5" x 24", geared head, gearbox, power cross feed, 3 jaw chuck, collets Dickson post, cabinet stand, green	£1400
HARRISON L5, 4½" x 24", fully tooled, complete with clutch	£950
HARRISON L6, 6" x 24", geared head, gearbox, excellent toolroom machine. Choice 6	From £950
HARRISON L6, 6" x 40" geared head, gearbox, clutch, gap, power cross feed, 3/4 chucks, steady, burnered collet chuck & multi size collets	All for just £2,450
HARRISON 140, 5½" x 24", 3 jaw chuck, gap bed, power feeds, clutch	£1,400
HARRISON M250, 5" x 30", 3 jaw chuck, in excellent condition	£3,450
HARRISON M300 6" x 24" geared head, gearbox, 3/4 jaw chucks	choice £2,450/£2,650
HARRISON 155 6½" x 25" precision lathe, fully geared, well equipped	£1,850
KERRY AG2 5½" x 24", geared head, gearbox, 3 jaw chuck,	£850
MYFORD ML10 3¼" x 13", changewheels, 3 jaw chuck, tooling	£725
MYFORD SPEED 10 3¼" x 18" change wheels, 3 Jaw chuck, fixed steady, tools, stand (new chuck fitted)	£850
MYFORD ML7 3½" x 19", changewheels, 3 jaw chuck, we have a large selection of this popular model	From £725
MYFORD ML7B 3½" x 19", gearbox, 3 jaw chuck etc.	£1,250
MYFORD ML7TB 3½" x 19", Tri-lever, gearbox, 3 jaw chuck, 4 way tool post, cabinet stand	£1,200
MYFORD ML7 3½" x 31", changewheels, 3 jaw chuck	£1,125
MYFORD ML7R 3½" x 19", excellent selection	£1,750 to £1,950
MYFORD SUPER 7 3½" x 19", changewheels, 3 jaw chuck,	Choice £950-£1,150
MYFORD SUPER 7B 3½" x 19", gearbox, 3 jaw chuck	Choice £850 to £1,400
MYFORD SUPER 7 3½" x 31", changewheels, 3 jaw chuck	Choice £1,400
MYFORD SUPER 7, 3½" x 19", 3 jaw chuck, power cross-feed, late model.	Choice
MYFORD SUPER 7B, 3½" x 19", gearbox, 3 jaw chuck, cabinet industrial stand, **Power cross-feed**, late machine	£2,450
MYFORD SUPER 7B, 3½" x 19", gearbox, **Power Cross Feed**, cabinet stand, tooling	£2,750
MYFORD SUPER 7B, 3½" x 19", gearbox, **Power Cross Feed**, cabinet stand	£2,950
MYFORD SUPER 7B 3½" x 31", gearbox, cabinet stand	Just £1,500
MYFORD SUPER 7B 3½" x 31", gearbox, 3/4 jaw chucks, travelling steady, tools, coolant, industrial stand, 240 volts	£2,300
MYFORD SUPER 7B 3½" x 31", gearbox, power cross feed, 3/4 jaw chucks, travelling steady, cabinet stand, coolant, tray and blocks	£3,250
SMART & BROWN 2nd operation lathe, 3 jaw chuck, x-y slides, tailstock, stand	**Just £300**
SOUTHBEND 4½" x 24", c/wheels,3 jaw etc	£400
SOUTHBEND 4½" x 20", gearbox, power cross feed, 3 jaw chuck, home-made stand, as is, part ex	£550

TOO MANY LATHES TO LIST!!

MILLING MACHINES

V – Vertical, H – Horizontal

ADCOCK AND SHIPLEY 1ES, Horizontal prec. machine, table 30" x 8" (powered), coolant	Just £495
ASTRA L4 Horizontal/vertical 1" arbor, 2 horse taper swivel head, cabinet stand	£950
BRIDGEPORT turret mill, R8/powered quill feed, 42" x 9", 1970	£1,650
BRIDGEPORT turret mill, R8/powered quill feed, 48" x 9", powered table, DRO 1975	£3,250
BRIDGEPORT SERIES 1 /2hp, variable speed, 48" x 9" table, Heidenhain DRO 1978, Chrome Slides	£3,450
CENTEC 2B Horizontal, 1" arbor, table powered, 3 ph motor, single phase main motor	£725
CENTEC 2B H/V, vertical head, 2 morse taper/swivel, cabinet stand	£1,400
ELGAR EMTOC H/V H-30INT, V-2 morse taper, table 24" x 6" powered, coolant, pedestal stand	Just £1,250
EMCO MENTOR, V, 2 morse taper/swivel head, table 20½" x 6"	Now just £750
EMCO (Made in Austria) FB2 vertical 6 speed 2 morse quill feed head complete with power feed to table	£2,250
HARRISON horizontal, 31" x 8" powered table	Very clean £650
RISHTON VM60 Bench Machine, table 24" x 6", geared 6 speed head Clarkson chuck and vice	£2,200
RISHTON complete with powered table and cabinet stand	£2,450
TOM SENIOR M1 horizontal, 25" x 6" powered table, 1" arbor	£575
TOM SENIOR M1 V/H, 25" x 6", 2 morse taper, 1" arbor.	Selection £1,200 – £1,450
TOM SENIOR TYPE S vertical turret type, mill, coolant, extremely nice	£2,250

DRILLS

FOBCO ½" Bench, Tilting Table	£325
FOBCO ½" Pedestal Drill Tiling table	£345
MEDDINGS MF4 2 morse taper, 10 speed, bench type	£375
MEDDINGS MF4 2 morse taper, 10 speed, pedestal type	£425
POLLARD CORONA Pedestal ½"/1 Morse	From £100
PROGRESS 3A 3 morse taper, power down feed, speeds 70-1180	£675
STARTRITE MERCURY ½" 4 speed bench drill	£225
STARTRITE Pedestal Model, ½" capacity	£225

JIG BORERS

BCA MKIII Jig Boring Machine, 8" diameter table, 10 spindle speeds 300-3,250rpm	Just £1,250
ELLIOT Mini Borer, collets, powered quill feed head, table 16" x 7"	£1,400

GRINDING / BUFFING

CAPCO Surface grinder + magnetic chuck, as is, part ex	£475
CLARKSON MKI Tool and Cutter Grinder	£550
EAGLE Model 2 surface grinders, mag. chucks	Choice £750
EAGLE MODEL 4 surface grinder, complete with magnetic chuck	£775
I.D.P. Trimtool cutter grinder	£250
MILFORD 12" Pedestal Grinder	£325
PINNACLE MODEL 450A Tool and Cutter Grinder (current model) capacity, 8¼"x16" 1986	£1,275
VICEROY Grinder, pedestal model	£145
VICEROY Buffers, pedestal models	Each £145

MISCELLANEOUS /FABRICATION MCH.

ELLIOT 145, 14" shaping machine	£650
ALBA 1A, 10" shaping machine	From £250
TES, BOXFORD/MYFORD quick change tool posts	British/New £75
EPCO 1 ton garage crane on wheels	Just £275
QUASIARC 300amp welder on wheels	Just £125
ECLIPSE 12" magnetic chuck for lathes round	£150
ECLIPSE 12" magnetic chuck to fit Harrison L6	£150
BOXFORD 4½" vertical swivel slide	£345
KINGSLAND 4ft/16g Fibricated guillotine	£750
DENBIGH NO.5 Flypress complete + stand	£375
ESSEX Tapping machine	£125
GUYSON sand blasting cabinet + extractor	late model £770
COLCHESTER STUDENT capstan unit	£525
WEBER 1½ ton mobile garage crane, late blue colour	£495
VANCO 1" belt sander, bench model	£325
UNION 4½" x 30" bench centres	£175
CLARKSON 40INT collet chucks	Each £100
HARRISON L5 Vertical Slide	Never used £345
HARRISON L5 Boring Table	£165
CENTEC VERTICAL QUILL feed heads	Each £750
BCA MKIII stand	Just £140
MIDSAW vertical metal Bandsaw	£1425
POTTER'S WHEELS foot or 240 volts operated	£100 / £300
ELLIOTT 1250 STURDIMILL vertical head	One off (rare) £525
DORMER MODEL 108 Drill grinder + wheels, cabinet Pedestal stand	£475
RJH linisher 4" wide belt, pedestal	£345
DENBIGH/NORTON No.2/3 Flypress	From £145
THEIL collets (horizontal)	Each £20
JONES AND SHIPMAN/ SEDGEWICK Arbor presses	From £140
STEEL STOCK Just arrived – to callers only	
ELLIOT SAMSON 3R5/KEETONA 13 Hand shears and stands	£85 / £75
JONES AND SHIPMAN rotary table, 12" still crated, horizontal/vertical	£550
CLARKSON Collet Chuck, 3 Morse (Lge)	£125
ELLIOT 10' rotary table	Choice £250
BRIDGEPORT No.1/No.2 Boring Heads	£145 / £175
ELLIOT U1/U2 Slotting Head	£475
SWAGE BLOCKS	£125 / £145
PVE NO.2 Co-ordinate table, 13" x 12"	£425
J&S Universal Grinding Vice	Choice £275 / £325
BOX TABLES: Grade A and B, many sizes	£40 - £150
SINE TABLES, New Selection, just in	Each £275
PVE Sine Square	As New £120
SINE BARS, Metric/Imperial	From £35
SLIPS/GAUGES Metric/Imperial, New Sets; 87/81 piece	£215 / £145
PARALLELS (Boxed Sets), Some Grade A	£35 / £45
HORIZONTAL METAL BANDSAW 6" x 4½" capacity	New £170
MEDDINGS Fretsaw, 24" throat	Choice from £350
RAPID Chipper Hopper	£325
KASNET Mini Furnace	Each £175
COLCHESTER STUDENT/MASTER Round head, faceplates,small/large	£50 / £80
ROTARY TABLE, 6" Horizontal/Vertical	New – Now just £150
ROTARY TABLE, 8" Horizontal/Vertical	New – Now just £245
ROTARY TABLE, 10" Horizontal/Vertical	New – Now just £295
QUALTERS AND SMITH 6" Hacksaw	£345
VEHICLE MOUNTED CRANES/Epco Electric up-swing round 1 ton	From £375
FORGE DS130 Ceramic Chip Type	£350
BORING HEADS 2/3 Morse, R8 Taper, Max. Cap 4½"	New, each £90
ANVIL, 1cwt on stand	£125
ODONI Machine Bed Clamps (pair)	Special £24.50
HEIGHT GAUGES by Chesterman, Shardlow, Moore and Wright	From £95
EDWARDS 1.5 metre Guillotine 16BG	£950
ELLIOTT 10M Shaper, 10" stroke	£325
ELLIOTT 5" Universal Dividing Head and Tailstock	£325
SMART AND BROWN H3/H5 Toggle Press	£145 / £165
DIE Boxes	From £45
TRANSWAVE 3HP Converter	New £300
TRANSWAVE 5HP Converter	New £375
TRANSWAVE MMC rotary converters now available	From £455
CROMPTON PARKINSON ¾ HP, resillient mount, Boxford/Myford Super 7 Type motor,	New £135
DEWHURST TYPE A Reversing Switch,	New £49
TAYLOR HOBSON Model D complete with script	£750

JUST IN – WOODWORKING

GRADUATE/JUBILEE Wood Lathes	From £475
HARRISON JUBILEE Wood Lathe 240 volts	£775
WADKIN/STARTRITE Tyzack Sawbenches	From £345
WADKIN/WHITEHEAD Planers	From £395
WIMERLEA 8" saw bench pedestal	£275

VISA

JUST IN !! WE HAVE A LARGE SELECTION OF
HARRISON L6 LATHES PRICED £950-£1,400 (EXCELLENT VALUE)

MasterCard

LARGE SELECTION OF MACHINE TOOLS AND MEASURING EQUIPMENT FAR TOO MUCH TO LIST AVAILABLE.
PLEASE RING US WITH YOUR REQUIREMENTS. WE WILL BE PLEASED TO HEAR FROM YOU.
DISTANCE NO PROBLEM!! ALL PRICES EXCLUSIVE OF V.A.T.

DELTA

SWITCH

ARE YOU COVERED?

MODELLERS ACCIDENT PROTECTION

**WE DON'T WANT TO BE ALARMIST
BUT ACCIDENTS CAN AND DO HAPPEN**

YOU NEED GOOD PUBLIC LIABILITY ACCIDENT INSURANCE PROTECTION FOR ALL TYPES OF MODELLING

What can we offer?

You don't need to be a member of any organisation – this insurance is available for all modellers and for all types of model

All types of R/C model covered – Boats, Cars, Aircraft (Fixed Wing and Helicopter) plus non R/C models of all types

Live Steam models of all types including Passenger Liability (available at extra cost).

Two levels of cover £1 Million or £5 Million cover (necessary for operating models on some sites)

Simple Limits and Conditions – Maximum engine capacity R/C, C/L and Cars of 40cc; up to 7¼ gauge Locomotives and Traction Engines up to ¼ full-size. Cover is limited to Permanent Residents of the UK and Channel Islands and extends to cover members away on holiday overseas. An excess of £10 is payable on each and every claim. Cover is effective from receipt of your payment.

HOW DO YOU APPLY?

Simple – fill in the coupon and return to NSI Insurance along with your cheque or Credit Card number or telephone 01322 616300 with your details.

Send to: **Nexus Special Interests Insurance, Nexus House, Azalea Drive, Swanley, Kent BR8 8HU.**

Name..	Please tick product required
Address..	☐ Standard £1M (£12.50)
....	☐ Extra £5M (£17.50)
....	☐ Passenger £1M (£15.00)
Post Code..	☐ Passenger £5M (£20.00)

A Club Discount is available – please call for details

Please make cheques payable to Nexus Special Interests

AGENTS NEEDED

You can earn extra money by selling

MODEL ENGINEER
CENTENNIAL CELEBRATION COLLECTION

at your shop, show, club or class

Call us NOW on 01322 616300

BRUNELL MODELS

TRACTION ENGINES • STATIONARY ENGINES • LOCOS Etc.

SEND NOW for our NEW FULLY ILLUSTRATED CATALOGUE

A4 Size with over 40 Models, many New, some in full colour

3" Scale MARSHALL 7 NHP

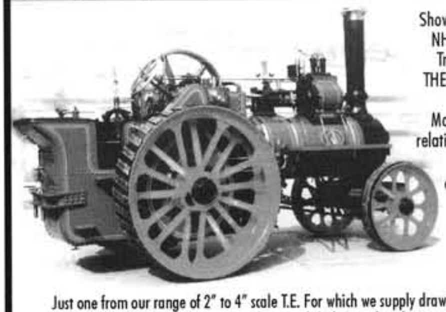

Shown left is the 3" scale MARSHALL 7 NHP single cylinder general purpose Traction Engine of 1910 ' PRIDE OF THE ROAD' measured up from the full size Marshall No. 54587/10. For Model Engineers who wish to build a relatively straightforward model, which is a true replica of an actual engine, at the same time powerful enough to use on the rally field. Length 51", width 21½", top of chimney 32", Cylinder 2⅞", bore x 3" stroke.

Just one from our range of 2" to 4" scale T.E. For which we supply drawings, casting, finished and insurance tested boiler, boiler kit, laser cut spokes, crankshaft, transfers, brasses, gear cutting, machining, fittings etc.

DOUBLE DIAGONAL STEAM ENGINE

We are pleased to take over the sole design and marketing rights of this very interesting engine. It is an accurate and detailed 1/8 scale model of which the prototype can be seen as running exhibit. Its history and details are in the new catalogue

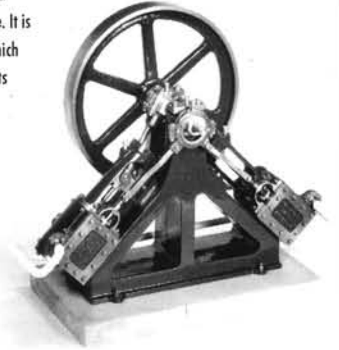

BRUNELL MODELS

MAPLE WORKS, NORTHGATE,
WHITE LUND IND. EST.
MORECAMBE, LANCS. LA3 3AZ

CALLERS BY APPOINTMENT PLEASE

Fully illustrated catalogue £5.00 Overseas £6.50
by Internet, money order or sterling cheque only
Tel: 01524 843270

See us on the INTERNET at :- www.brunell.com
email us at :- sales@brunell.com

GRASSHOPPER BEAM ENGINE

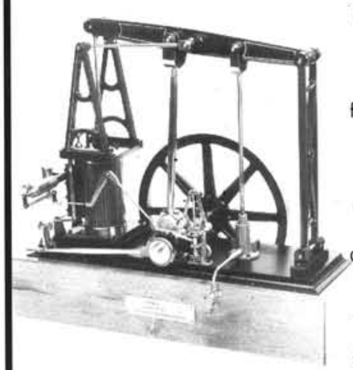

The 'Grasshopper' Type Beam Engine has been based on one in a well known steam museum. It is relatively easy to make and assemble, and makes a very attractive model which is fascinating to watch when working. We have found it will run very well on very low pressure of about 15lbs sq.in. The early steam engines have always held a fascination for model engineers from when the engines first became self contained, developed from the practices of using the engine house structures as engine supports, and ceasing to use wooden beams in favour of all metal construction.

The above are just some from the very many in our range of Stationary and Marine engines from very small to some quite large.

We also have an extensive range of Ploughing engines and Traction engines from 1½" to 4" scale

BRUNELL MODELS