edge to a small try-square set on the face-plate. When in correct position to the square, it should just touch face-plate, and can then be tightened down. Now add a second clamp on the near side (not shown in the drawings) and tighten that. Because the direction of impact on the job is as the arrow shown on the plan, a stop (indicated dotted in the same view) should be bolted to the face-plate, set touching the side of top flange of the job. Any tendency to swivel under the clamps is thus met.

The job should be roughed out first by a facing cut on the bottom flange face, using a pointed roughing-out side-cutting tool, or a knife tool, and finished with a round-nose side-cutting tool. The dimension b in Fig. 1 should be taken off the drawing, and the facing carried out till this dimension shows by rule between the offset point on the bracket and a second rule held edgeways flat on the faced flange, as seen in the side view.

The second operation, that of facing the top flange, will be published in this column next week, followed by a third note showing how to machine the slide.

In the issue of 25th September 1924 there started a series under the Workshop Topics banner. This series which ran until 7th May 1925 showed a number of machine set-ups which is useful to the beginner even today. Only the initial article is reproduced here but it is highly recommended that anyone building a stationary engine for the first time should obtain the complete series of articles - they will find them most useful.

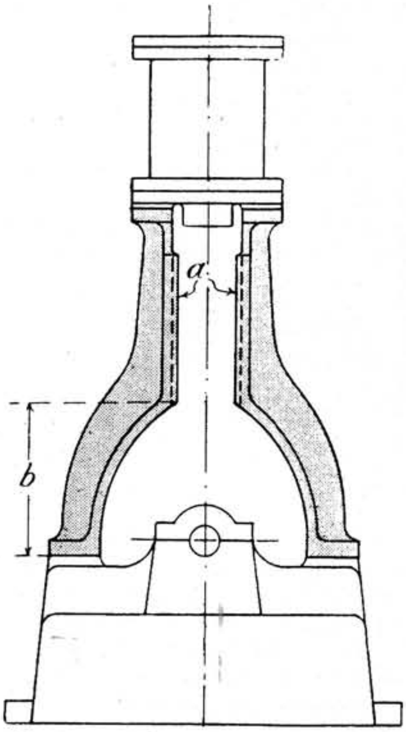

Fig. 1–Tpe of Vertical Engine with Double Standard Bracket.

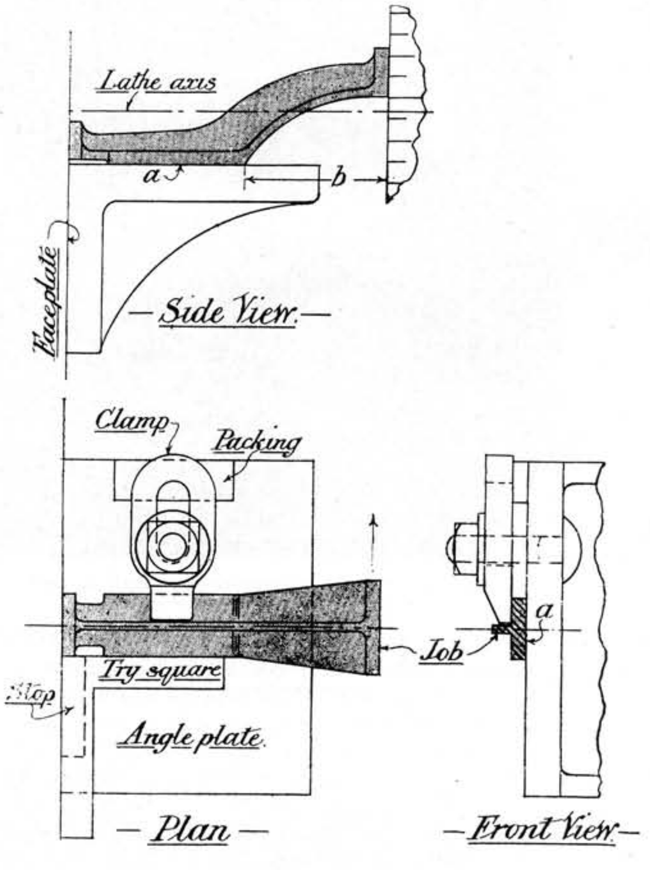

Fig. 3–The Setting-up of a Standard Bracket to Face the Foot Hinge.

January 1, 1925.

MODEL SIDE-LEVER MARINE ENGINES.

By W. T. Barker, R.N. (Member, S.M. & E.E., London).

THE model now to be described can make no claim to anything in the way of scale reproduction of a prototype, but at least it illustrates pretty well the prominent general features of the class with a fair amount of detail. Unfortunately, also, it departs in several particulars from what was standard practice. This happens because I made my drawings mainly from recollection of Watkin's old paddle tugs Cambria, Iona, and others on the Thames familiar to me whilst serving my time, aided by some rough notes and sketches taken many years later from a hoary old-timer I came across when on the China Station. Construction was well under way before I was able to examine the splendid models in the Science Museum, which showed me a number of defects in my own, only a few of which could be corrected without wholesale scrapping of parts. I am rather sorry now I did not do this.

The full title of this model is rather a mouthful, viz.:- "Twin, indirect-acting, jet-condensing, disconnecting, side-lever engines," and the principal dimensions are:-

The late Lt. Com. W. T. Barker was one of the greatest model engineers of all time. His series of models showed the development of the marine engine and although not scale models of particular engines they displayed the typical practice of the period modelled. These models can today be seen in the Liverpool Museum.

Cylinders: 1½-in. bore by 3-in. stroke.
Slide valves: ½-in. stroke.
Cylinder to crankshaft: 8-in. centres.
Side levers: 8¼-in. centres.
Crankshafts and pins: ½ in. diameter.
Air pumps: ⅞-in. bore by 1½-in. stroke.
Feed and bilge pumps (two of each): ⅜-in bore by 3/4-in. stroke.
Side or connecting rods: 5⅞-in. centres.
Crank rod or pitman: 7¼-in. centres.
Engine centres athwartships: 6⅞ ins.

Full-size drawings of the complete engine and of the principal details were first got out and then patterns were put in hand. Most of the wooden ones I got made for me by a pattern-maker, not being myself a competent woodworker. The more elaborate ones needed for the superstructures, braces and one or two other parts on which I thought it would not be possible to do much subsequent profiling, I made myself of brass. Sketches of the rest of the

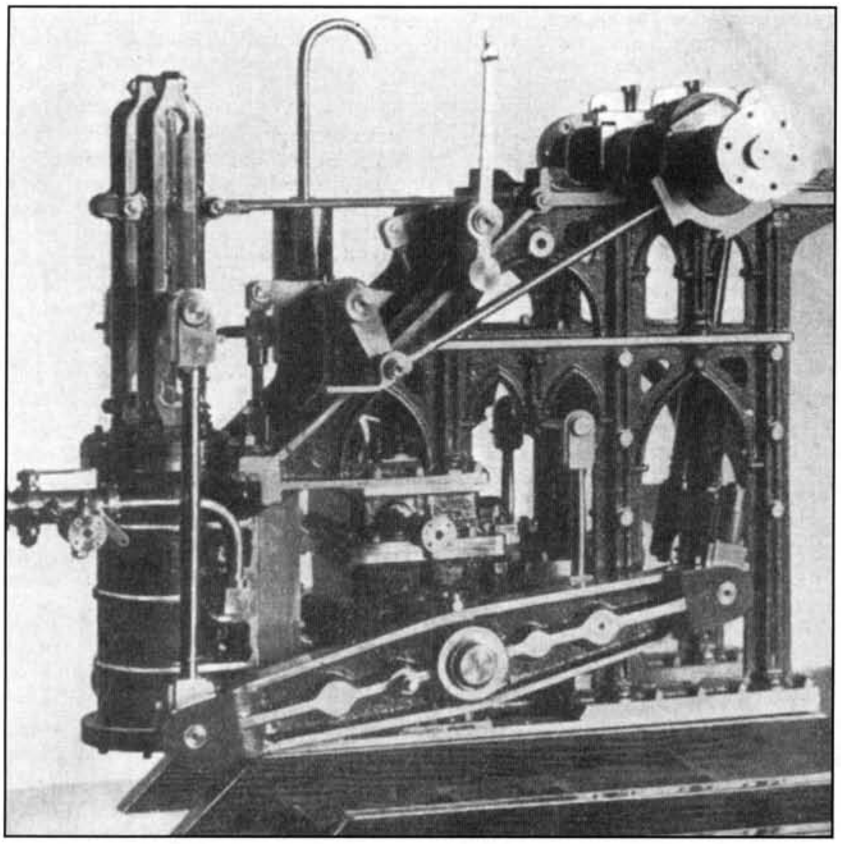

Fig. 1–View of the Inboard Side of the Starboard Engine.

details were gradually made from the full-size general arrangements more or less concurrently with the building of the model, admittedly a method at variance with all the canons of procedure, but one that saved me a lot of trouble as so many minor alterations happened to the original design during the four and a half years the model was under construction. At the end I had a nearly complete set of detail sketches, but the old general arrangement was decidedly out of date.

In the autumn of 1919 I found it very difficult to get castings from my patterns. I remembered several pre-war model engineering firms, but most of them seemed too busy on peace programmes to care for my potty little order, while one which did consent to work it in somehow between quantity lines merely succeeded in mis-laying several patterns somewhere in the programme or under a heap of mass production, and eventually, after much correspondence, returned the survivors "regretting their inability to quote." However, all's well that ends well, for after the casualties had been replaced an obliging foundry was at length discovered which, after endless delays and charging an exorbitant price, at last delivered me my longed-for castings, and I was able, about the middle of 1920, to get properly to work.

Castings are used for the following parts:- Side levers, frames or superstructure, braces, main bearings and eccentric sheaves in iron, cylinders, covers, parallel guides, valve chests and covers, condensers, hotwells, air pumps and covers, feed and bilge pump valve boxes in gun-metal. All the rest of the model is made from sheet and rod material. Platforms, ladders, stanchions and rails are of German silver; there are 105 stanchions in all, 1/16th in. diameter, with ⅛-in. balls, whilst the railing is German silver wire 1/32nd in. diameter. All the bolts, nuts, screws and washers I had to make specially, they are almost all square headed and chiefly 7 and 9 B.A. and 1/16th-in. Whitworth. There are 1,060 of them altogether, besides 270 iron snap-head rivets 1/32nd in. diameter used in the platforms, ladders, etc., chiefly.

Fig. 1 shows the inboard side of the starboard engine with most of the details 'offered up', but before the non-fitting portions of the castings were smoothed up. The air-vessel-like apparatus just seen on the far side of the engine is a form of 'breather', called an air cone, on the hot-well discharge pipe overboard. I subsequently abolished this, it is not an essential fitting and rather spoiled the appearance of the finished model. The steam pipe and throttle valve are seen fixed up in a temporary position for testing purposes, but actually a test was never carried out.

The lower part of the box casting just in rear of the cylinder is the jet condenser, the upper part being the hot well to which both condensed steam and condensing water is delivered by the air pump. The small pipe and cock projecting from it over the inboard lever is the discharge to the feed pump or the feed tank. The surplus water, much the greatest proportion, would be discharged overboard through the larger pipe not clearly seen in this photo. It rises from the top of the hot well and passes out through an opening in the frame on the other side. The injection pipe and cock are not visible in this view.

Jet condensers were usually also fitted with a 'bilge injection' valve. The intention of this accessory was to enable condenser and air pump to help in clearing bilges if the ship should spring a leak. Its absence from the model is one of the omissions in the design previously alluded to.

The slide valve may be mentioned here. It is what is known as the 'long D' type, takes steam on the inside and is partly steam and partly counterweight balanced. Expansion was carried rather far in these engines and valves were given a good deal of both steam and exhaust lap.

Exhaust compression and steam jacketing of cylinders were practically the only steps towards heat economy taken in these old engines, and ineffective though they appear nowadays, taken in conjunction with the low steam pressures (4 to 8 lbs. per. sq. in.) in vogue and the constant 'brining' of the boilers necessitated by the salt-water feed, I suppose they did in a way and to a limited degree promote the desired object, and if at the expense of other things, well, coal was very cheap in those days, and there was, besides, a fine, free water-tank always just overside.

The cylinders of the model, by the way, are not jacketed, this being another of those unfortunate omissions. The valve is driven by rocking levers actuated by the usual gab rod from a balanced slip eccentric. Reversing is effected by lifting the gab and driving the engine by hand operation of the slide valve until it gets going in the opposite direction, when the gab can be dropped in again.

Figs. 2, 3, 4 and 5 show the completed model from various points of view, Nos. 2 and 4 in particular give a good idea of the care that was lavished in these grand old engines on beautifying the lines and ornamentation of the structure, though this is much simplified in the model itself.

To brighten up the interior, which would otherwise be almost invisible, the engine has been painted a pale French grey, almost white, instead of the more correct black, dark green or dark brown.

In Fig. 2, showing the outboard side of the port engine, the bilge pumps can be seen arranged to work from the outer beam. The proper position, however, for both bilge and feed pumps would be on either side the fore and aft midship gangway, where they would be easily accessible to the engineer on watch. Even if there were room for them in the wings, which is doubtful, the pumps in the position they occupy in the model would be difficult if not impossible to reach when the engines were running, but I put them outboard in the model partly for appearance sake and partly for convenience in erection. The feed pumps only are in the correct position, the port one is just visible in Fig. 3. Just above the beam fulcrum or trunnion the injection pipe and cock can be seen projecting from the condenser. There would be in practice a means of operating this cock from the driving platform, regulation of the admission of condensing water being a somewhat frequent necessity when under way. Internally the condenser is a mere box containing nothing but the extension of the injection pipe projecting right across it and having a large number of small holes (.025 in. diameter), by means of which the condenser is filled with a fine water spray to condense the exhaust from the cylinder. Air pressure due to the vacuum, together with the head caused by the height of sea level above the cock, were the only agencies of water supply. If, however, the model were to be run under steam a force pump would, probably, be necessary for it.

Above the injection cock the hot-well overboard discharge pipe, previously mentioned, can be seen coming out through an opening in the main framing. This pipe is ⅜ in. diameter.

On the upper or deckhouse platform can just be seen the operating levers.

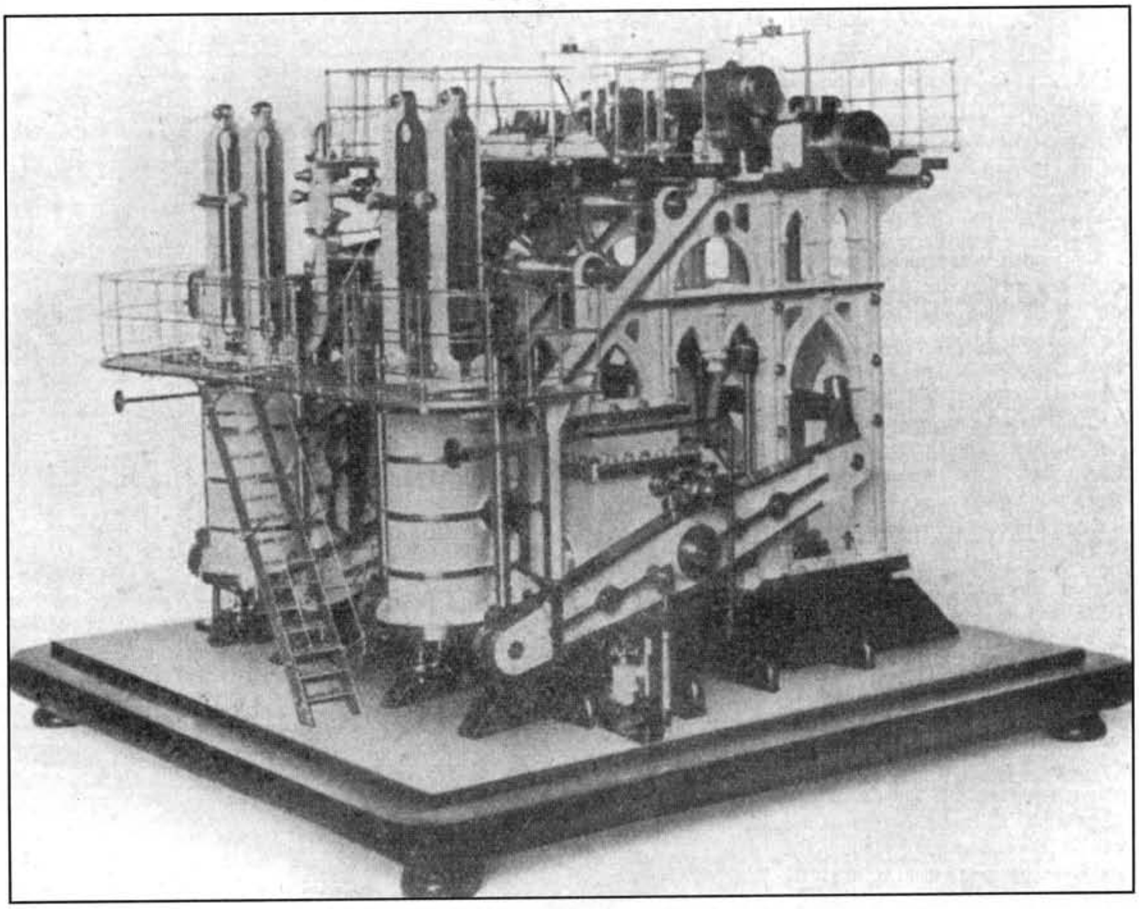

Fig. 2–Showing the Outboard Side of the Port Engine.

There are three of these to each engine for working the slide valve, the butterfly throttle valve and lifting the gab respectively.

Fig. 4 is a view of the after end of the engines and shows off the framing and the braces whose function is to stiffen the structure laterally under the main bearings. It can easily be appreciated that if a paddle steamer with engines of this type were rolling at all deeply very heavy stresses might be thrown on these parts. The lever observable on the top platform is to operate the disconnecting gear, thus enabling each engine to be run independently. Although I have fitted this gear to the model, it was not generally found in the larger engines of seagoing ships, but was mainly confined to tugs and other harbour craft needing frequent and complicated manoeuvring.

The two pipes appearing one on either side of the lower midship gangway are the main feed pipes to the boilers, while the valve boxes between each pair of engine bearers are the condenser overflows. These are non-return valves automatically kept closed by the vacuum while the engines are working, but which prevent condenser and air pump filling up with sea water during short stoppages when it may be undesirable to interfere with the setting of the injection

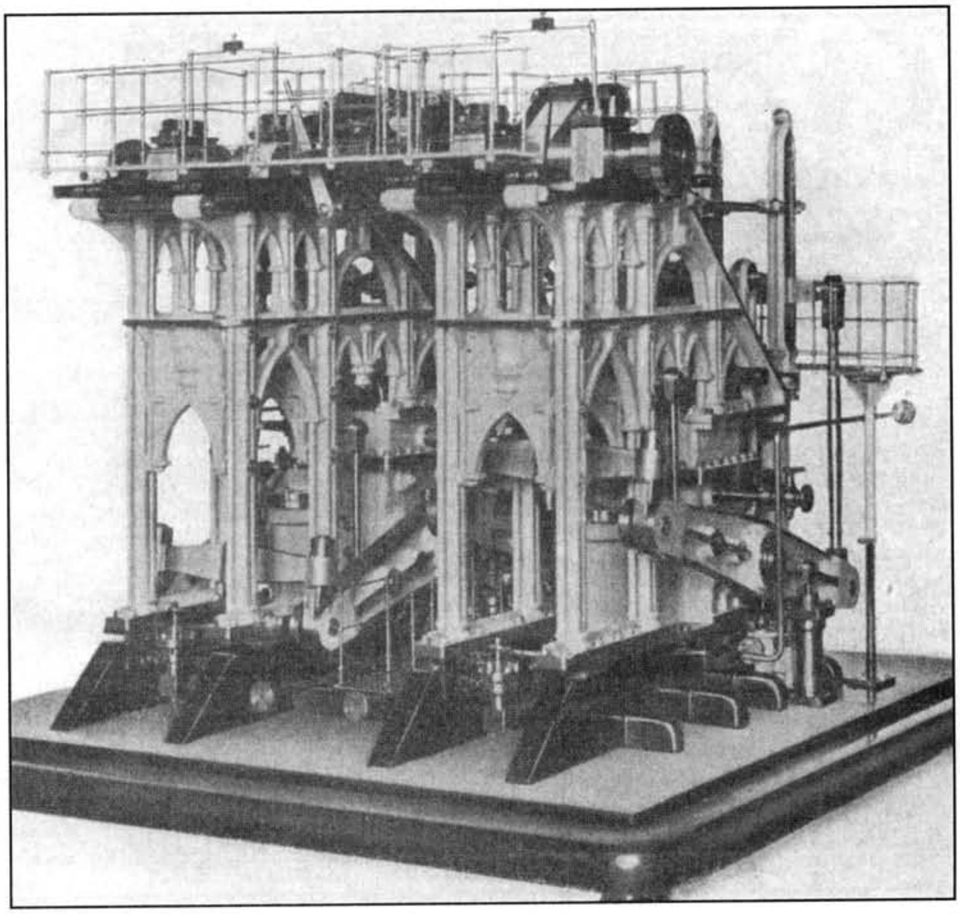

Fig. 4–View of the Completed Model from the Paddle Shaft (After) end.

or if closed and the sea-cock leaked. The valve box is provided with several holes round its circumference at the level of the foot valve of the air pump through which the overflow can escape into the bilges.

As to methods of working, I am afraid I cannot claim any of the honourable handicap that so often moves me and doubtless many other readers of The Model Engineer to admiration of the skill and resource of those contributors to the journal and our pleasure who build beautiful models with a meagre outfit of tools. I love good tools, and am fortunate to be able to afford them. All I can say is that some of the work was rather heavy for the 2½-in. centre "Adams" lathe on which all the turning was done, except boring the side levers, which were too large to swing. Other machines used were a small planer and a milling machine, and last, but by no means least, a dentist's treadle engine.

I commend this well-known instrument of torture to the notice of other model engineers, in whose hands it might well start a new career of usefulness on a more agreeable plane. The horrid little burrs with which the dentist excruciates us are very effective on metal. I have found nothing so far to beat them for smoothing and profiling in awkward corners inaccessible to files. Once the way of using them with a steady hand is acquired it is remarkable what they will do in this way, whether on cast iron, steel or gunmetal. The two former materials are certainly rather hard on them, but they only cost about 4d. a piece, and can be got in a great variety of sizes, shapes and cuts, and the fact that I only wore out about half a dozen altogether on this model speaks well for their temper and durability. The little grinding and polishing wheels that can be got for use on the dental engine are also very useful at times.

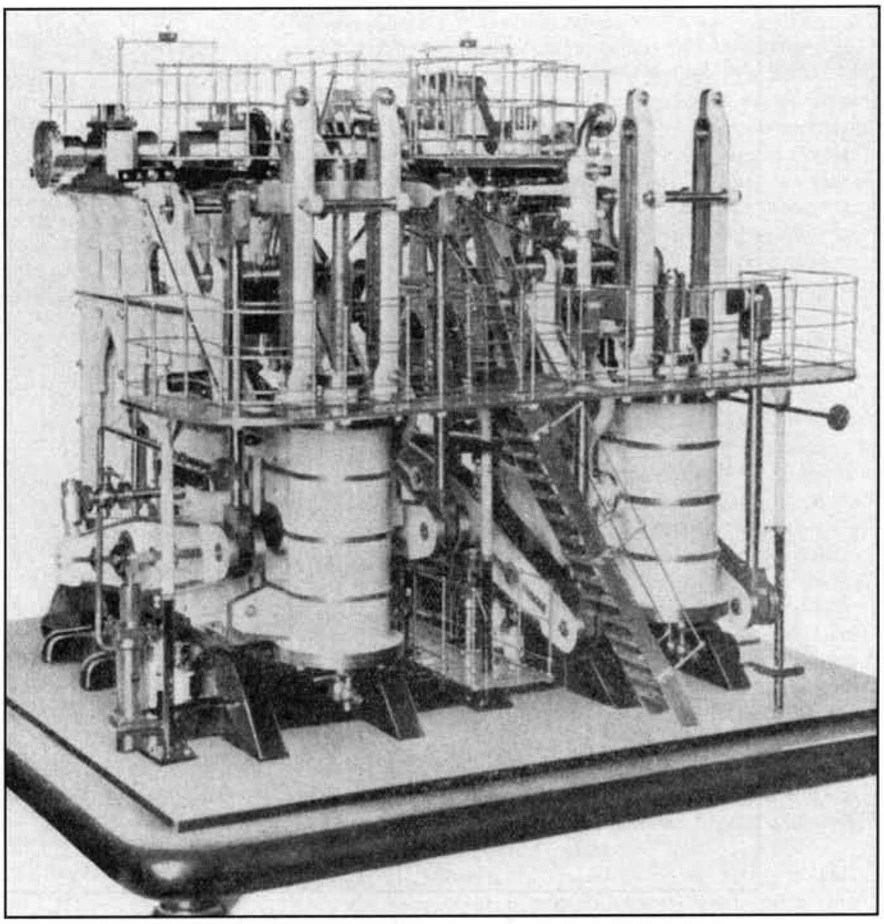

Fig. 3–View of the Completed Model from the Cylinder (Forward) End.

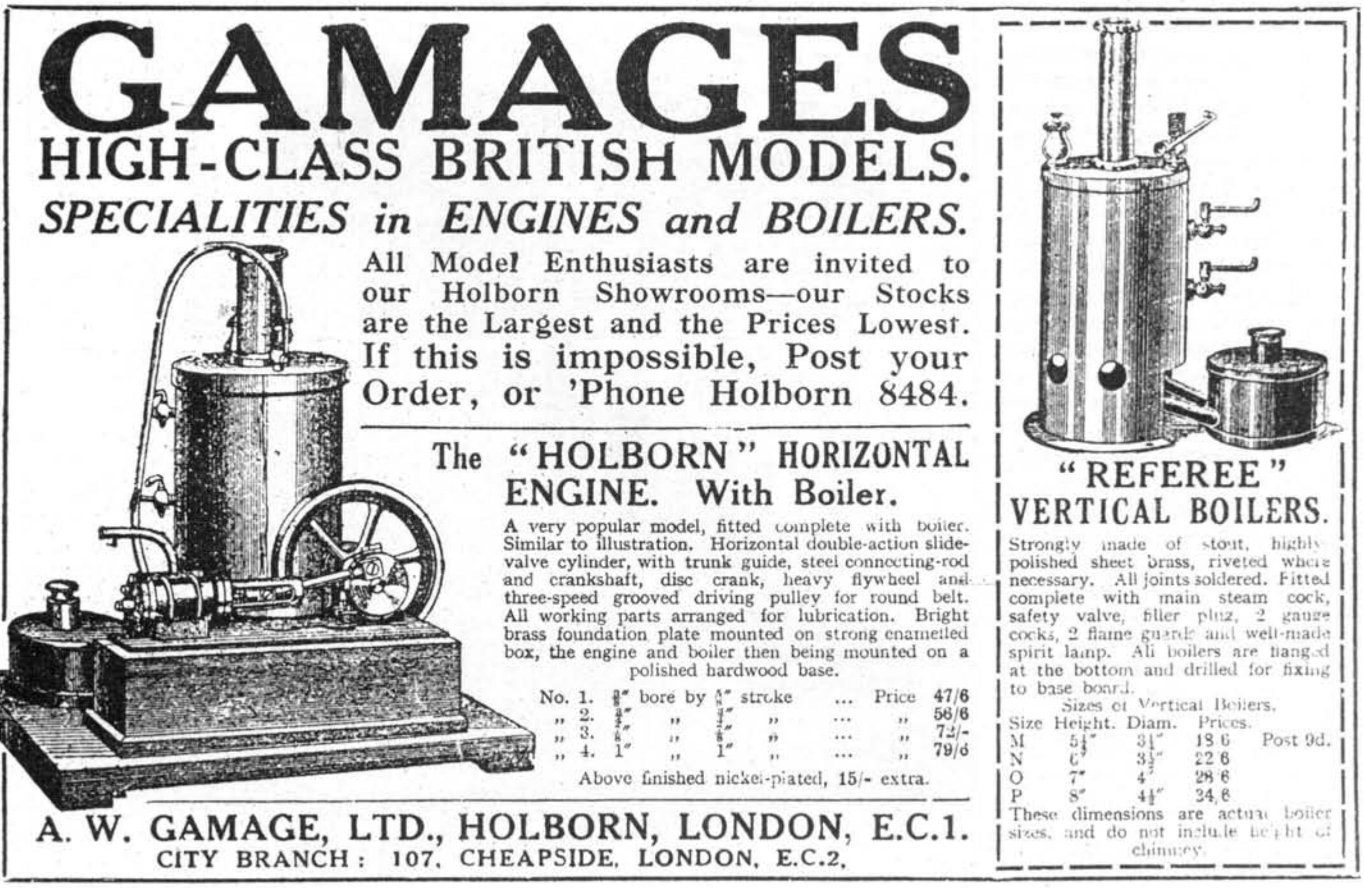

May 7, 1925

A Three-Cylinder Single Acting Uniflow Reversing Launch Engine.

By T. W. Averill

Tom Averill was a well-known writer for The Model Engineer in the 1920's. He was also a great friend of L.B.S.C. and his innovative designs were often mentioned in L.B.S.C.'s Live Steam Notes. This design is typical of his original thought and is a most unusual model having a single acting, uniflow steam circuit and poppett valves. Tom was a leading member of SMEE and this model, together with others of this manufacture now form part of the Society's collection of historic models.

THIS model which is shown in part sectional side and end elevation in Figs. 2 and 3, and also illustrated by photographs, was started in the same manner that a good many of my models have commenced their existence. One day having nothing to do and wishing I had, I was hunting round my workshop, and in one of the bins I found three brass bushes as shown by Fig.1. I thought that these could be made up into cylinders for a model engine, so I went into the "drawing office" and made a few rough sketches of engines that they might be used for. That morning I had been reading in the current issue of The Model Engineer about a single-acting uniflow engine; now this was a type of steam engine that I had never tackled, so I said, "Why not make one"? and I there and then set about making the working drawings for an engine of this type. As I had three cylinders, I thought that I had better use them all, and so decided to make a launch engine. Now I am not like another contributor to The Model Engineer, namely, "L.B.S.C.." for he seems to think that working drawings are not of much account. Well, I'll admit that I have made numerous successful working models (not locos though) without first getting out proper working drawings, but it is a very expensive proceeding, as I have found; it is much cheaper to find out mistakes on the drawing-board than it is to make a lot of fittings, only to find that they have to be scrapped because some important part cannot be got to clear another one when the model is being erected. I have just come up against this trouble in a machine I have been making, for which I had only rough drawings with no details worked out. In designing this engine I decided that I could make it up out of stock material; and need not use any castings; but since the engine has been completed and tested under steam, I think the design would be an ideal one for a launch engine of a useful size, and using flash steam, so I am giving a sectional drawing (see Fig.4) of a cast-iron cylinder and piston, which would be suitable for use with high temperature steam, and of a size suitable to drive a small launch. Of course, my built-up brass cylinders would not be of any use for flash steam, as in building them up it was absolutely necessary to use soft-solder as a caulking medium in places. This engine is apparently vibrationless, and if made in a large size should be practically noiseless, but the cams were so small that I had to make the opening and closing angles fairly steep, so that I could see where the cam movement began and ended, and consequently the valve gear is rather noisy; but apart from this, the engine is quite noiseless, except for the open exhaust pipe, and the beat from this sounds just like a motorcycle in the distance. Under test the engine was not fastened down in any manner, it was just laid on the bench and coupled up to the boiler (my ¾-in. scale 4-6-4 Tanky) by about 18 ins. of 5/16th in. copper pipe and although it was run up to a speed of 2,000 revolutions per minute, it never moved its position in the slightest, and no vibration could be felt by placing the tip of the finger on the stand when the engine was running at the above speed.

The crankcase framing is a bright mild steel bar, as indicated in the side and end elevations. I had rather a troublesome job making this, as the only way to get any strength in the joints was to braze them after they had been pegged together. The trouble came about through the frame warping when it

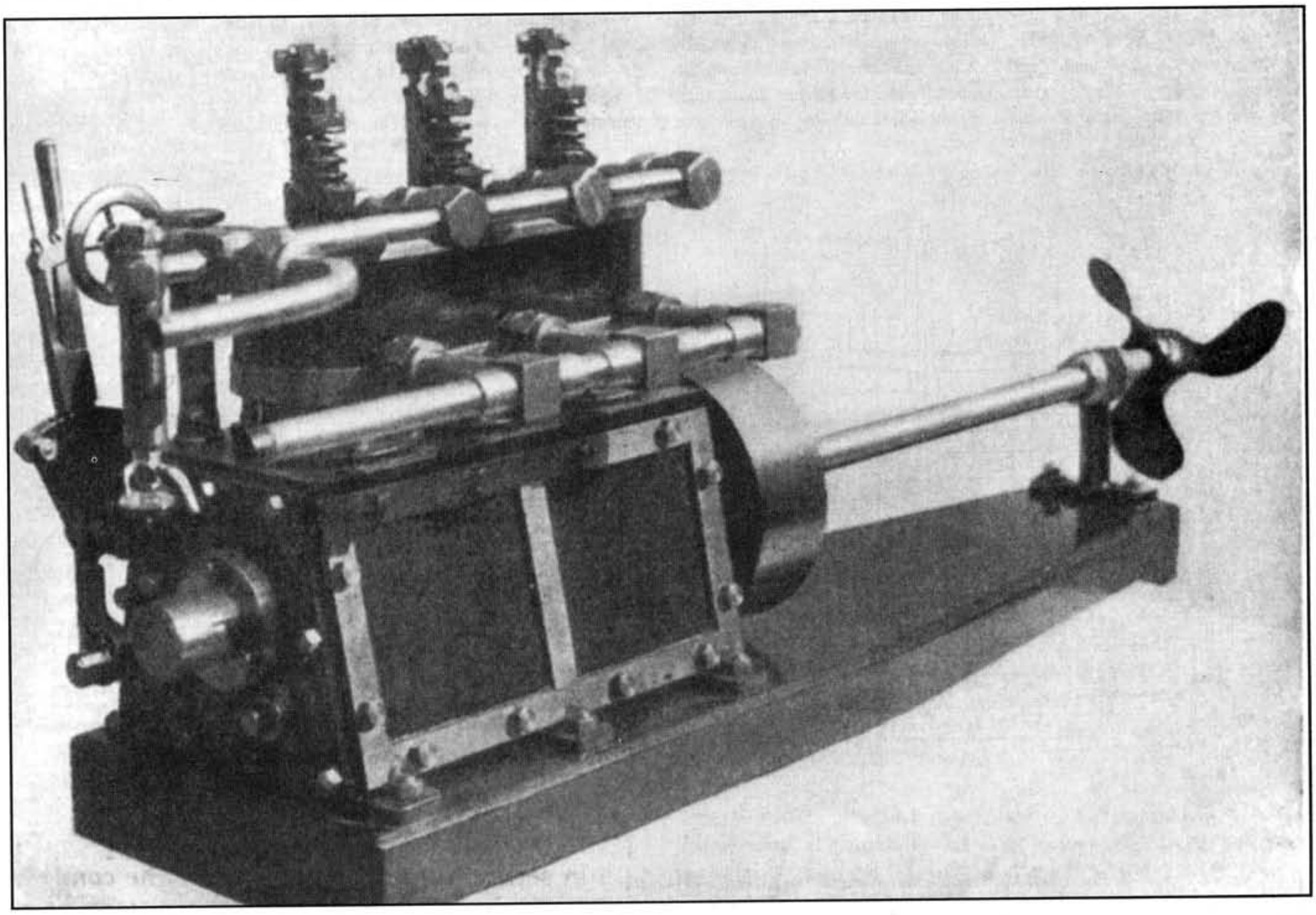

The 3-cylinder Siingle-Acting Uniflow Reversing Launch Engine.

was being brazed, and I could not get it back exactly true, so had to take a light cut all over it with the planer, and as it was rather a flimsy job to attempt to plane, of course I broke several of the joints and had to braze them up again before it was completed. But there, model engineers only want patience and a lot of it, and then nothing is impossible. The end plates are made from ⅛ in. mild steel, and the top plate, which carries the cylinders, from 3/16th in. sheet. The bottom of the crank case is filled in by a piece of 18 gauge sheet. Both end and side covers are detachable, the joints being made with brown paper. The side covers are also made from 18 gauge sheet; the edgings and centre straps are ⅜ in. and 1/16th in. brass strip flush riveted and sweated on, and, being polished these strips materially improve the look of the covers, and also by thickening them up enable a good joint to be made with fewer bolts. The crankshaft was made from a solid bar of mild steel, 2 ins. diameter and 9⅜ ins. long, and a lot of shavings were made before this was completed. The crank webs are ¼ in. thick and are left circular; the crank pins and shaft are turned down to ⅝ in., which is rather large for an engine of this size; but as the shaft is rather long and there is no central bearing fitted, I had to make it fairly stiff to prevent it springing. I found it a rather interesting job making this shaft, and it was turned throughout with a tool made from an old file; incidentally, old files make splendid turning tools; this one did the whole of the turning on the shaft with only one grind-up just before finishing off. The cylinders, as before stated, were made from brass bushes; these already had a good bore, so only needed to be lapped out. The bottom flanges were made from 1 in. standard turned steel washers; these were bored out a push fit for the outside diameter of the bushes and counter bored to take the small flanges on the bushes and then sweated in position. They were next mounted on a mandrel and the edges of washers trimmed up true and the ends faced. The top plate of crankcase was marked off for the position of cylinders, and recesses 1/32nd in. deep bolted to it with 4 5/32nd in. bolts to each cylinder, the joints being made with brown paper. At the same setting up, as each recess was bored, a hole was also bored right through the plate to clear the pistons. The collecting rings for the exhaust ports (these ports consist of twelve ⅛ in. holes equally spaced round the cylinder so that they are uncovered by the piston at the end of the down stroke) were made from slices cut off 1¾ in. diameter mild steel bar about ½ in thick. These were then bored out a driving fit for the outside of the cylinders and a recess was bored in as shown on the drawings, and a hole was drilled and tapped to take the exhaust union; then they were driven in place and sweated up; but before sweating up, make sure the exhaust connections are in their correct positions. The top ends of the cylinders are closed by discs of brass ¼ in. thick; the cylinder bores were slightly counterbored to this depth, and the discs, after being drilled and tapped ½ in. by 26 t.p.i. to take the valve boxes, were driven in and secured by four 5/32 nd in. screwed brass pegs put through the cylinder walls; these ends were then sweated in. When the engine was finally erected, the cylinders were lagged with asbestos and sheet steel, polished brass bands being fitted round the top and bottom of the lagging plates; these plates were screw pinned to the cylinders in such a manner as to make the cylinders appear to be cast en bloc. The pistons are turned from solid mild steel bar with detachable top plates secured by four 3/32nd - in. countersunk headed screws in each; these tops have to be detachable in order to get the phosphor-bronze piston rings in position. There is only one ring ½ in. wide on each piston, and the joints are step cut to prevent leakage. The gudgeon-pins are ¼ in. silver steel, slightly tapered at one end and made a driving fit in the piston. The connecting rods have split phosphor-bronze big ends secured by ⅛ in. bolts and nuts, and are also fitted with locknuts. The little ends are solid phosphor-bronze bushes. Both ends of the rods are connected by a mild steel bar turned down at each end to ¼ in. and screwed 26 t.p.i. tightly into their respective big and little ends and then sweated. This mat appear to be a rather weak method of making the connecting-rods, but as they are under compression all the time they are at work, it is amply strong enough. The gear wheels which drive the camshaft were two I

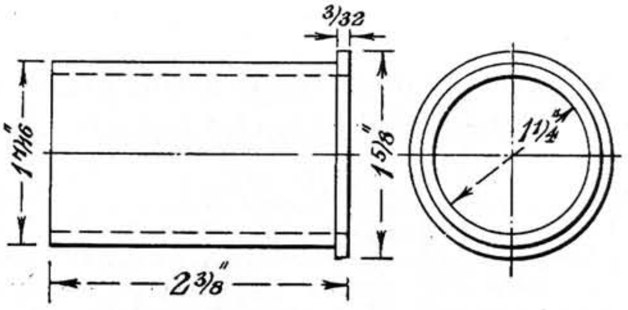

Fig. 1–The Brass Bushes used as the Nucleus of the Cylinders.

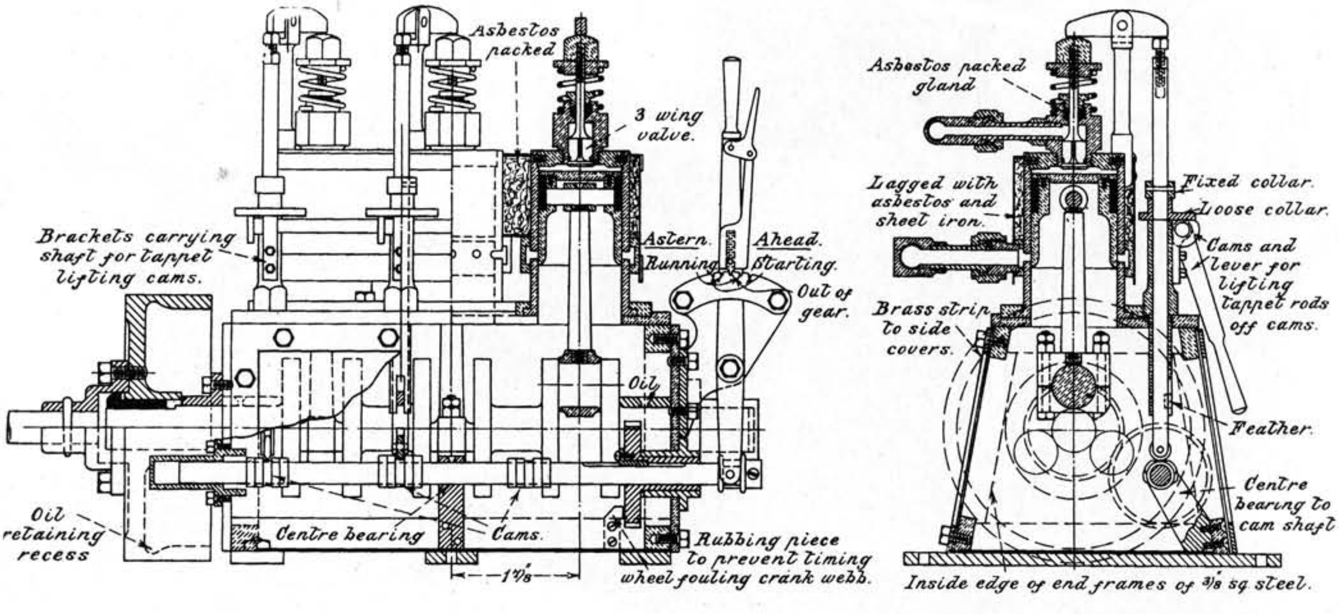

Fig. 2 and 3.–Part Sctional Side and End Elevation of 3-cylinder Single-Acting Uniflow Rversing Launch Engine.

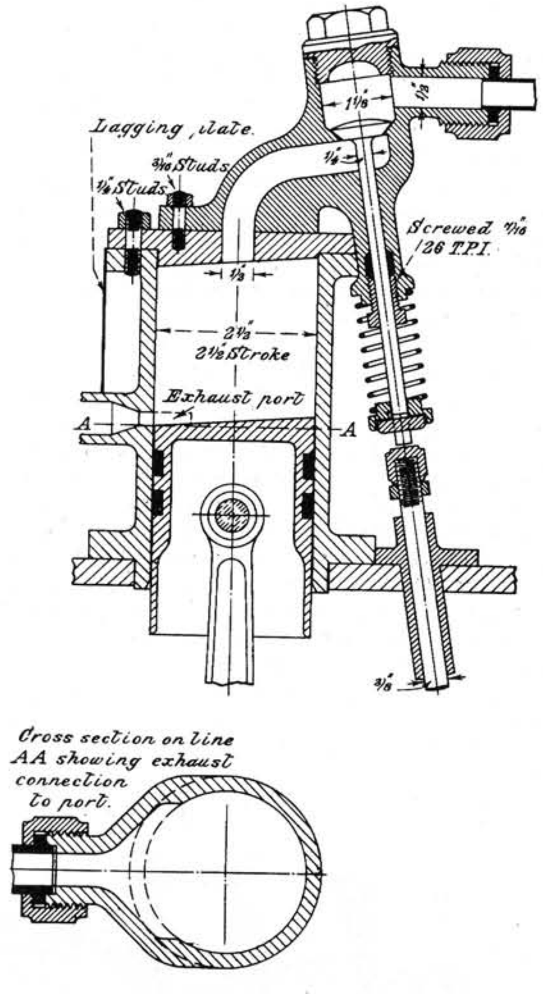

Fig. 4–Suggested Design for a Cast-Iron Cylinder for a similar Engine of larger size.

had by me, and which I believe once formed part of a sewing machine. They would have been better if they had been a little larger in diameter, for when they are properly in mesh, they bring the camshaft so close to the crankshaft that the big ends would not clear it without having the extreme bottom corners filed away, and they could not be made to clear the cams at all; so this made the fitting of the camshaft considerably more difficult, and I had to bore nearly all the inside of the flywheel (this was made from a solid disc of brass which I had by me) away to clear the camshaft bearing, which had to be long enough to support the camshaft when the reversing lever was in the astern position. When I was designing this engine I thought, "Well, a launch engine that could not be reversed would not be of much use", so I decided that this one would have to reverse, and I soon came to the conclusion that the only practical way of making it do so would be by traversing the camshaft under the tappet rods, so as to bring different cams into action. I originally intended making the cams so far apart that I could have gradual incline from one cam to the next, up which the convex-faced rollers fitted on the ends of tappet rods would be able to slide when the reversing lever was moved. However, I was unable to do this owing to the close proximity of the big ends to the camshaft, as I was compelled to keep the cams clear of these; and so could not make the cams as intended, owing to lack of room to traverse them. The cams as eventually made are shown diagrammatically in Fig. 5. They work quite satisfactorily, except that they are rather noisy; when the engine is in motion the reversing lever can be moved quite freely, but with the engine stationary, the tappet rods have to be lifted off the cams by the lever which works three cams underneath collars fastened to the tappet rods, to enable the reversing lever to traverse the camshaft. As will be seen from the drawings, the valves, which are turned from mild steel, are of the three-wing pattern, and are continued in brass boxes made from a hexagon bar; they are turned down ½ in. diameter and screwed into the cylinder heads with threads of 26 to the inch. A good many people who have seen this model have remarked on the size and strength of the valve springs. I will admit that they do look rather out of proportion to the rest of the parts; but it must be remembered that the valve stems are working under live steam pressure, and so have to have stuffing boxes and glands to prevent leakage of steam round the stems. This necessitates having the springs large enough in internal diameter to clear the hexagon glands; these glands can be adjusted by means of a specially thin spanner which can be inserted between the coils of the springs; also, as the live steam pressure is at the back of the valves, the springs have to be more than strong enough to overcome this, as was proved when the engine was on test. It had been running quite nicely for some time at a working pressure of from 50 to 80 lbs., but I had my mind on getting 2,000 r.p.m. out of it, and it would not quite get up to this, as it was very stiff, through all bearings being up tight at the time, so I increased the pressure to 100lbs., when on opening the stop

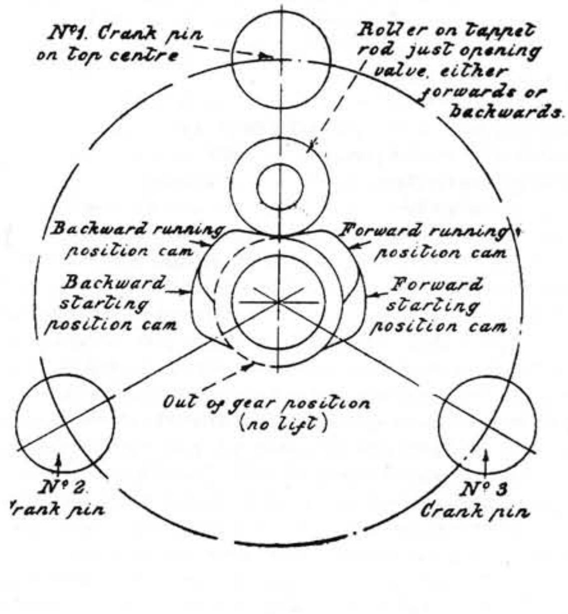

Fig. 5–Diagram showing the Cams as eventually Made.

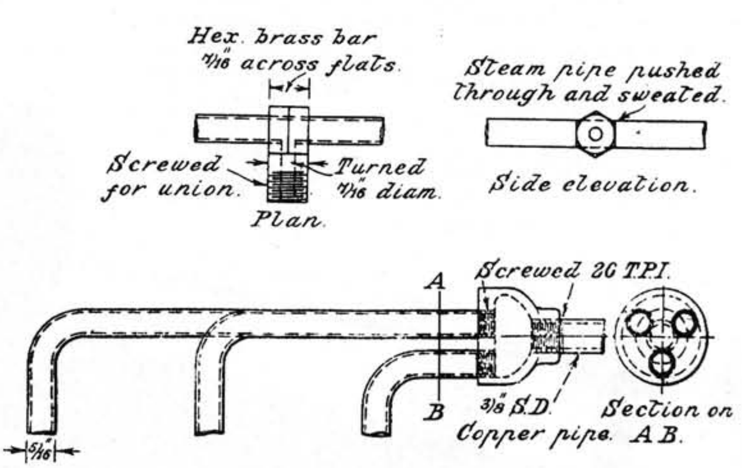

Fig. 6–Sketch of Methods of effecting Steam Distribution.

valve, the engine refused to start, and on trying to turn it round by hand, found that it would not move, I knew what the trouble was at once, but I had another (much younger) engineer watching the tests, and I asked him to find out what the matter was; he was unable to do so, however, and gave it up as a bad job. But it was quite simple; the extra 20 lbs. pressure was too much for the strength of the valve springs, and so these allowed the valves to open in the manner of a safety valve blowing off; all the valves opened at once, and all the pistons having steam on at the same time locked the engine. But I had anticipated this trouble, and had made the valve springs adjustable. The valve stems, which are 5/32nd in. diameter, are threaded, and the spring caps, made from hexagon brass rod, are screwed on to them and are locked in position by means of the case hardened steel cap nuts. Of course, as you screw down the spring caps, this increases the distance between them and the rocker arms, but the tappet rods have a screw adjustment at the top which easily puts this matter right. I screwed down the caps a turn or two and then tried 100 lbs pressure again, when off she started and easily got up to the 2,000 mark. All the parts of the tappet rods, which work in long brass guides, are forked at the bottom and fitted with a phosphor-bronze roller to work on the cams. The guides are screwed into the crankcase top-plate ⅜ in. by 26 t.p.i., and the rollers and forks must be small enough to pass through these holes. As will be seen from the drawings, there are four cams with a no-lift portion between each pair, for each cylinder. The no-lift portion of the cam is out of the gear position. As will be seen from the diagrammatical view of the cams (Fig.5), two cams are for forward gear and two for reverse; but there is really no necessity for two reversing cams, one starting position cam should be quite sufficient. The reason for having two cams for each way is that to make certain that the engine will start herself in any position, the valves must be kept open nearly to the end of the stroke, but if this was done with the engine in the running position, it would be very wasteful of steam, as the exhaust port commences to open almost directly the steam valve closes; but with the camshaft in the running position, the steam valve closes at half stroke in this engine, but, of course, could be made to close at any other position desired by alternating the profile of the cams. That both cams are necessary is proved by the running of the engine. With the reversing lever in the running position, nine times out of ten the engine will not start herself, but with the lever in the starting position she will start every time; but although she is using almost twice the amount of steam the revolutions no higher than with the lever in the running position. In the photo of the back view of the engine the arrangement of the steam and exhaust connections can be clearly seen. But it is not at all an ideal design, and would be quite useless for flash steam. My chief reason for making it as shown was that I had a lot of brass T-pieces in stock and thought that I might as well use some of them up. These T-Pieces were used for the exhaust connections: they were drilled with 5/16th-in. holes; the straight through portion of the T was bored out a sliding fit for the ⅜-in. outside diameter copper pipe and the centre piece of the T was screwed to take the union connection. These were screwed up in position on the cylinders, and the exhaust pipe pushed through the ⅜ - in. holes in the T's, the end of the last T being plugged up. The pipe was now secured in position by means of a screwed peg in each T; it was then taken off and the joints thoroughly sweated. It only remained now to run a drill down the centre piece of each T through one side of the pipe, this hole making the outlet from the main pipe to the branches. The steam pipe was made in exactly the same manner, except that instead of the T pieces, fittings made from hexagon brass rod were used in their places. In Fig. 6 I give a much better design. The distributing piece from the main pipe to the three branches can be made out of a solid piece of bar. Steam and exhaust connections can be both alike except for the different sizes of pipe. The main steam pipe should be 5/16th in. outside diameter, and the branches ¼ in., the main exhaust ⅜ in, and the branches 5/16th in. outside diameter.

In conclusion, there is one other point in the design that if altered would, I think (I am not sure of this point), improve the running of the engine, and that is that there should be more clearance space between the piston and the cylinder cover when piston is at the top of its stroke. At present there is only about 1/32nd-in. clearance space, and when turning the engine round by hand the compression seems rather excessive. The propeller was fitted just to show that the model was intended for a launch engine. It appears in the photo to be made from castings, but no casting was used; it was built up. The blades were cut out of 1/16th-in. thick sheet brass, and the boss from brass rod, and after it had been bored taper and a key way cut in it, it was mounted on the shaft, to which it is secured by the conical shaped nut, which has four tommy holes in it to enable it to be tightened up. The boss was now turned to shape, and with the aid of the division plate three slots were milled in it and the blades driven in after they had been twisted to the correct pitch. There were now secured in place by screwed plugs, and the thickened up portions at the roots of the blades were made by plastering on solder with the soldering-iron and filing this up to shape. It was afterwards enamelled vermilion, and it would be quite impossible to tell from looking at it that it was built up.

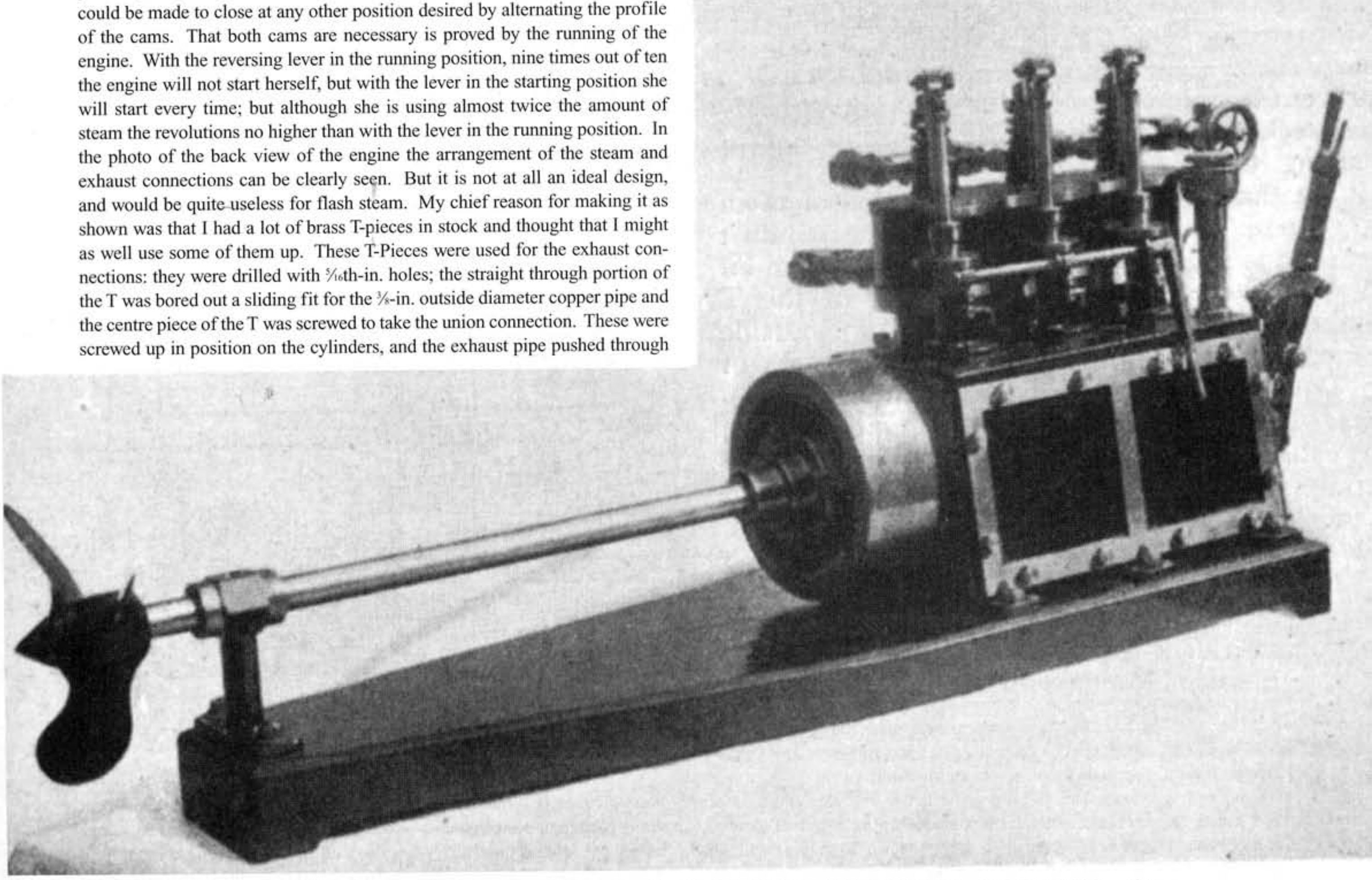

Starboard Side of Engine showing Lever and Cams for Lifting Tappet Rods, also Combined Oil Filter and Crankshaft Breather.

Making Small Steam Cocks and Valves.

By C. H. Copeland.

IN WRITING the following lines, the writer thought perhaps, the subject might be of some interest to those model makers who like something rather better and more like the original, than the fittings usually to be obtained. The cocks and valves shown have actually been made by the writer, and are at present on models made by him. These fittings may not appeal to all model makers, as they entail a lot of hand work, some of it very small and fiddling, as they are all cut from the solid, no castings being used; but I think anyone who makes them and fits them to models, will agree with me that the time and work spent on them is well repaid by their, shall I say, natural appearance.

The 1/16th-in. Gland Cock (Fig. 1)

This is made from the solid; the original was made from a piece of cast metal 7/16th in. by 9/16th in. long, filed up square all ways, a centre line was put all round the long way, on all sides, and the ends centred for turning, a centre line was put round equidistant from each end and one side intended for the bore of plug popped for drilling. The opposite side intended for bottom of cock was lightly popped just to run off centre. Before doing any turning at it the hole was drilled for plug, just the size for bottom of plug, and reamered out taper; this was done on the drilling machine resting the faced side on table. I may say here that the best reamer for this job was as follows: A piece of silver steel was held in chuck and turned down taper at end to dimensions required, and three flats filed on taper leaving two cutting edges, and the half round part left formed a steady when reaming hole.

This stuff was now put in the lathe between centres and the flanges turned up to size, also faced to length of cock ½ in. with a parting tool the proper width, with corners rounded off cut down behind flanges to form branches of cock as shown in sketch (Fig.1). The rest of the work to body of cock was done with a light hammer and small chisels and files.

The plug was now turned up from hard brass rod, and fitted to body, the gland turned up from brass rod and drilled 3/64th in. for 13 B.A. hex. head set screws, body marked off from gland and drilled and tapped 13 B.A. and screws made and fitted. Plug was now put in place, gland put on and screwed down to hold plug in place. The passage was now drilled half way through from each end meeting in centre of plug. Cock was now taken to pieces, the burrs cleaned off plug, round the holes, and hole in body just cleaned out with reamer to take the burrs off caused by drill. The plug was ground in with finest grinding powder I could get and the square filed on plug to handle. When assembling for the last time, a fine strand of asbestos was put in stuffing box with a small quantity of graphite grease and gland adjusted to allow for plug to move rather stiffly. I have found it a good plan to put a very little graphite grease on plug also and rub well in.

A 1/16th - in, Globe Valve (Fig. 2)

This is also made from a piece of 7/16th - in. square hard brass rod ½ in. long filed up square all ways, and centre lines put round the same as the cock. The ends are drilled and tapped ⅛ -in. or 5 B.A. ⅛ in. deep, the hole for valve is drilled 3/32nd in., 5/16th in. deep, and opened out with a pin drill to 3/16th in. M.E. tapping 5/32nd in. deep and tapped out.

The valve was now held in small machine vice at an angle and steam passages drilled, one to come out below seating and the opposite one to come out above seating. The ends of the body are drilled ⅛ in. for this reason to get the steam passages in, as to get these at the proper angle with solid flanges, the holes would have to start nearly on the edges of flanges. It was found best in drilling the passages to use a very small centre punch (the short end of a knitting needle was used), and put a pop on the bottom of ⅛ in. holes towards side of hole to give the 1/16th in. drill a start. The body of valve was now put in lathe using holes in ends as centres, and the branches turned up using a round nose tool. The body was changed in centres, the 3/16th -in. tapped hole for cover running on loose centre, and the face for cover, and round the hole turned up.

The flanges were made from ⅜ in. round brass rod, held in chuck running true and turned down and screwed ⅛ in. Whit or 5 B.A. to suit holes in body. They were then turned and screwed and sweated into body. It will be best to finish the body to shape before fixing flanges, as there is more room to work. The cover, gland, spindle and wheel are all made from hard brass rod, and I don't think there is any need to take up space describing in detail the work on these as they are all more or less simple turning and screwing.

An Engine Stop Valve

This valve (Fig 3) was made for a little compound, centrifugal pumping set I made some time ago.

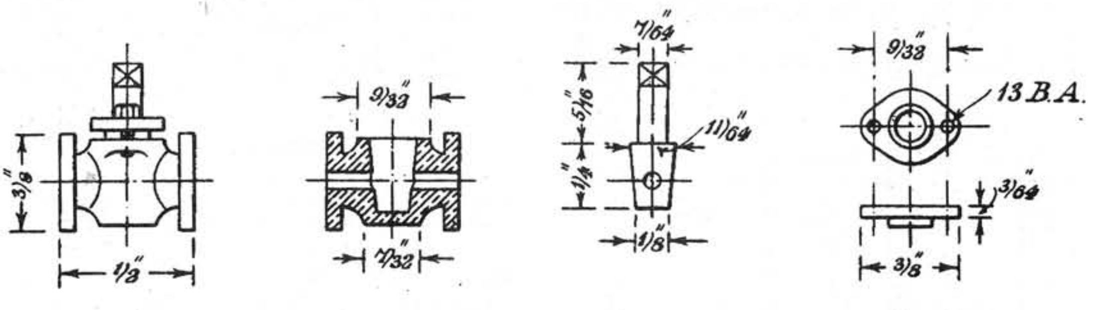

Cock Complete. **Section of Body.** **Plug.** **Gland.**

Fig. 1.–A 1-16th in. Straightway Gland Cock.

Valve Complete. **Section of Body.**

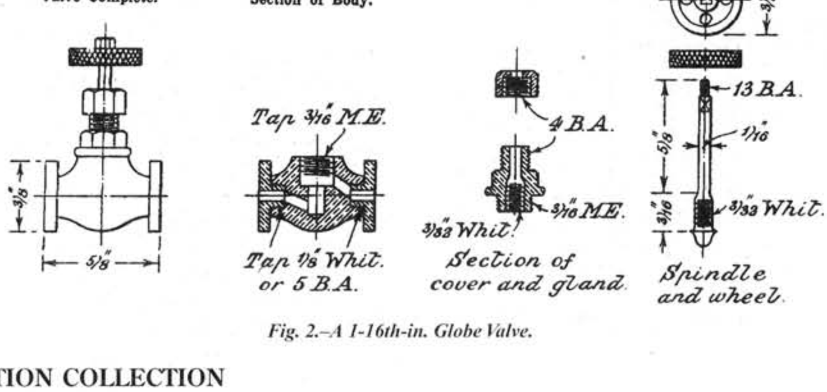

Fig. 2.–A 1-16th-in. Globe Valve.

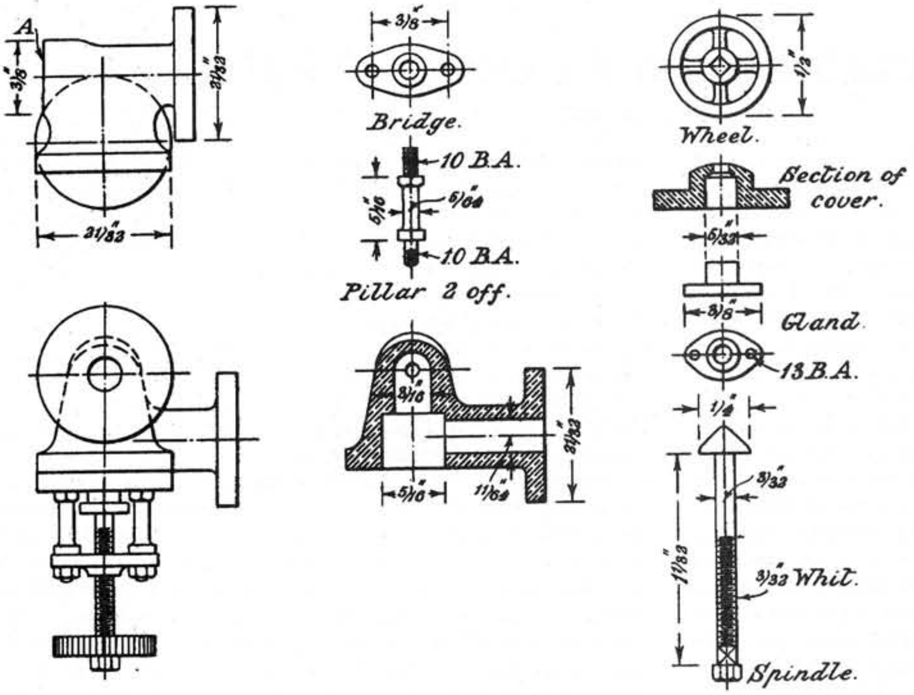

Fig. 3.–General Arrangement and Details of an Engine Stop Valve.

It, like the cock and valve, was made from the solid. A piece of gunmetal was filed up square all ways large enough to get the valve out of. Centre lines were then put round to suit the various branches and popped for drilling where required, on the other sides opposite the drill pops, small pops were put to run on lathe centres for turning up the various flanges and face for cover.

Before turning anything up the hole was drilled for the valve and opened out with pin the same as for Fig.2. The holes for steam ways were then drilled into body of valve, and these holes used as centres for turning flanges, etc. The 3/8 -in. facing marked A is to take 1/16th - in. globe valve for live steam to L.P. valve chest for starting up. The cover, gland, spindle and wheel were all turned from hard brass rod. The small pillars for bridges are mild steel, and the bridge of brass.

The procedure for making these is more or less a simple turning job, the same as on the small globe valve, and need not be enlarged upon here. The wheel is secured to spindle by square and 1/16th-in nut. The cover is secured on to box by four 1/16th -in steel studs and nuts.

A 9/16th-in. Sluice Valve

This valve is the delivery valve on the centrifugal pumping set mentioned above, and was made from a piece of 2-in. diameter hard rolled brass 1¼ in. long. This was held in four - jaw independent chuck, and both sides just skimmed up to a face, leaving it about 13/16th in. long. It was then put in two small V blocks and centre lines marked on. It is important to have these centre lines at right angles, as otherwise the whole thing will look out of square when finished; after getting the centre lines, mark off the 9/16th-in. hole for water passages. Of course this will be out of centre of the piece of brass, the centre of hole requires to be a little over 9/16th in. from edge of brass. After marking off, the brass was put into a four jaw chuck again with jaws out of centre, and centre of hole set running true, the opposite end of the brass resting on chuck face, if there is sufficient clearance for tool when going through, if not it can be set on two parallel strips, or kept off face altogether, and set the face of brass true at the same time is setting for the hole. The hole was now bored out 9/16 in., after which face up the flange.

The job now was to cut the groove for the wedge shape valve, a square nose inside parting, or screw cutting tool was made with nose 3/16 in. bare wide, and a mark was made on shank of tool 17/32nd in. from centre of tool nose and inserted into 9/16th-in. hole, the tool was then fed outwards, cutting groove 1/8 in. deep. The outside edge of flange can be roughed out and part of the metal round branch removed before taking out of chuck. It will be best now to try over centre lines again, and if correct hacksaw off the piece of metal farthest away from hole, to form the square flange for bonnet and file up square with flanges and vertical centre line.

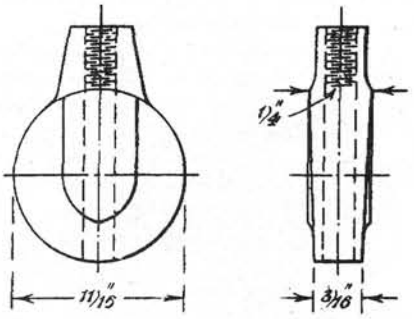

Fig. 6.–Wedge Disc for 9-16th-in. Sluice Valve.

The job was now put on a true 9/16th-in. mandrel rather tightly, and metal behind flanges removed to form branches, this is rather a tedious job and may require, as in my case, some special cranked tools to get behind circular flange and clear square flange. After this had been done at both ends, 3/16th-in. holes were drilled from centre of square flange into the groove in hole, making holes as close together as possible, but in any case making the two end holes to just cut into the side of groove, the holes can now be joined up by chipping out the metal between them into a slot right through into groove. The surplus metal was now chipped and filed off the outside of the body so getting into shape. The job was now to get the groove the proper taper for the wedge shape valve. This was done by getting a piece of 1-in. by 1/4-in. flat bar iron or steel, and drilling it at each end to suit two of the bolt holes in lathe faceplate, the centre was marked between holes and a centre line deeply scribed lengthways of the bar, a good deep pop was made at the intersection of the line and a circle

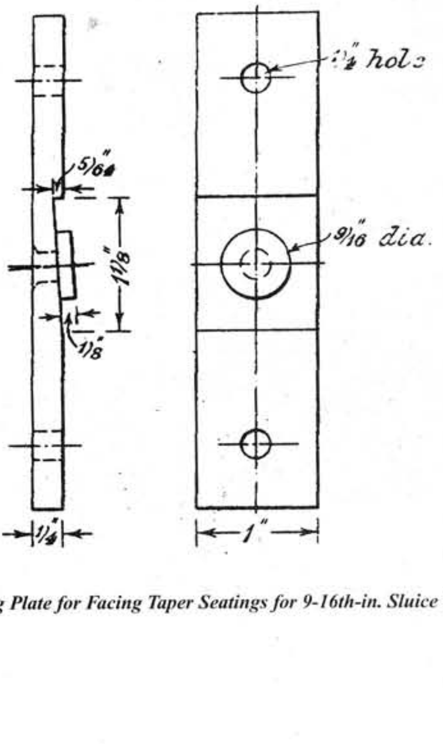

Fig. 5.–Jig Plate for Facing Taper Seatings for 9-16th-in. Sluice Valve.

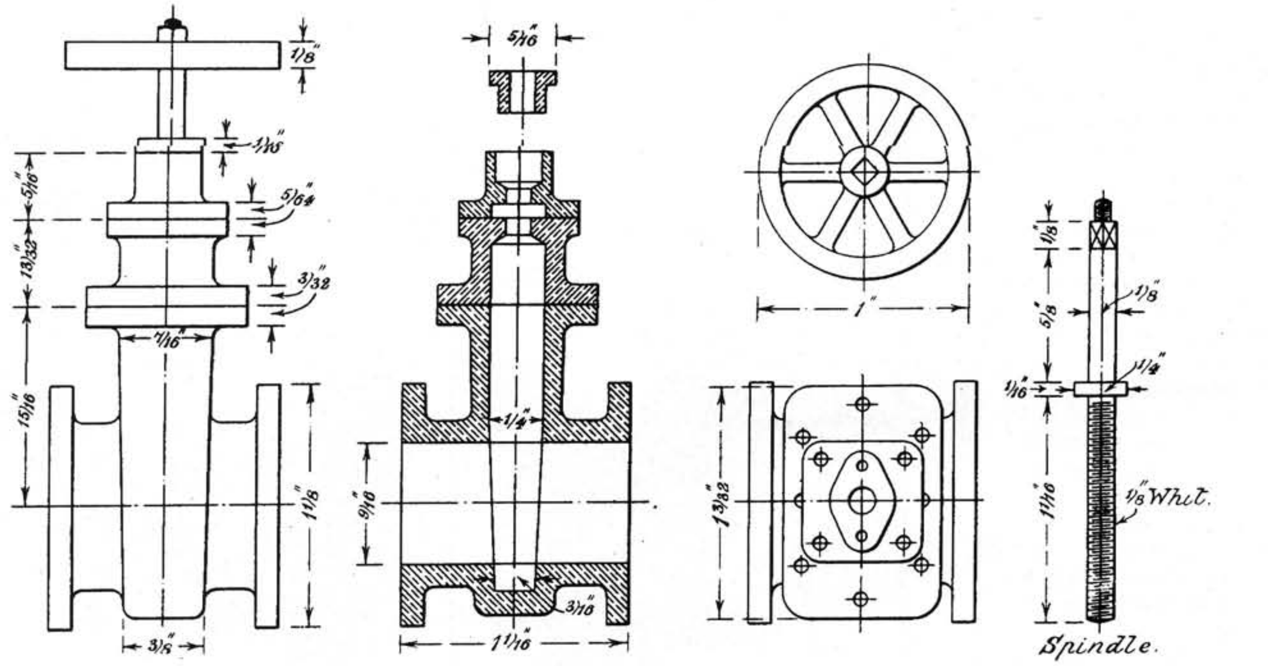

Fig. 4.–Elevations, Plan and Details of a 9-16th-in. Sluice Vave.

scribed, 1⅛ in. diameter (the size of flanges). The iron was now filed down taper as shown in sketch (Fig. 5), and a ¼-in. hole drilled at centre, square with the tapered face. A brass stud was now turned 9/16th in. diameter, and shouldered down to ¼-in. to fit hole in place - the 9/16th-in. part should fit hole in valve fairly tight.

The valve was now pressed on to stud with the vertical centre line registering with centre line on plate, and the whole thing fixed on faceplate by two bolts, and the valve set running true. Of course the flanges will run out of truth so the valve has to be set by hole just on the edge of groove, or better still by bottom of groove; this can be done by listening, using a bent wire or hook tool, a wire is the best as there is then no fear of making a false cut when setting. When this is done, the bolts holding the plate can be tightened up, and two small plates and bolts nipping on flange of valve will hold all tight. The face of groove nearest headstock can now be faced up with a small hook tool; just clearing the part of the groove at bottom of valve up. When one face has been done the valve can be reversed on plate and set to centre lines again, of course not disturbing the plate at all. The other side of groove can now be faced up, so getting the proper tapered faces for the wedge shape valve.

The oblong opening in square flange has now to be opened out with small chisels and files to the same level as the wide part of groove; this is a tedious job as so much care has to be used so as not to damage the turned faces, but it can be done all right with care. The best shape chisels to use, are what we used to call in the shops, side chisels. They are ground on one side something like a wood chisel, but not at so acute an angle.

The bonnet is a piece of the same stuff as the body of valve hacksawed nearly to shape and size then drilled for the spindle, counterbored with a pin drill from the underside and cut out to shape to take the top part of valve when full open, the outside is filed up to shape shown.

The loose stuffing box is made as shown. All the flanges can now be marked off and drilled for 1/16th - in. bolts, the ordinary stock bolts and nuts were used. The wedge valve (Fig. 6) was made from hard brass filed up to shape shown and drilled ⅛-in. tapping and tapped right through, the thread was drilled out for about three parts of the way from bottom leaving about ¼ in. at top as nut. A piece of ⅛-in. steel wire was screwed into the hole to form a temporary handle for use when fitting in, and the valve filed and scraped to fit in taper groove. The spindle, gland and wheel were turned out of brass rod and dimensions given, the wheel was turned as a blank and the spokes marked out, small holes drilled round them and metal cut out between and spokes filed up to shape.

I may say that these cocks and valves may be made smaller still if required. I have made two gland cocks with 3/64th-in. steam way for cylinder drains, the gland screws in these were 16 B.A. The globe valve can be made with 5/64th-in. steam ways, by screwing the end flanges 4 B.A.

November 24, 1927

A Radial-Type Steam Engine With Some Novel Features

By J. and W. Phillips

A GENERAL description of the model depicted in the annexed photographs, which the writers have just completed and given an extensive trial, may prove of interest to readers who may contemplate the building of a similar engine. As will readily be seen, it is of the radial type having four cylinders which are made from 1-in. diameter brass rod, bored and reamered so as to give a bore of ⅝-in. The cylinders are secured to the crankcase by plates of ⅛-in. brass, which are spun and sweated on to the ends of the cylinders as may be gathered from Fig. 1.

The valves are of the piston type and are worked off one cam, whilst a ball bearing is mounted in the end of each valve stem which reduces friction and helps considerably to the exceptional general smooth-running of the engine.

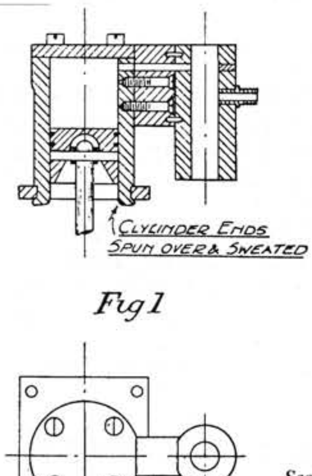

Sectional Elevation, and Plan of Cylinder.

The pistons are of the usual gudgeon-pin type, each being provided with two packing rings, and the connecting-rods consist of 3/16th-in. bright steel rod, these being secured to the crank by means of screw pins which pass through the two discs, as illustrated in Fig.2. This of course, does not apply to the master connecting-rod which is rigidly fixed to the one disc by two screws, in order to prevent locking, which would occur if this arrangement was not adopted.

The crankshaft is of steel and of the built-up type, balanced and pinned.

The crankcase is made by boring and machining a 2-in. block of steel and each cylinder mounted and secured to the completed article by means of four 6 B.A. screws passing through the cylinder base plates.

Two gunmetal bearings are provided for the crankshaft-one being in the crankcase and the other is built out in such a manner to ensure clearance of the valve gear.

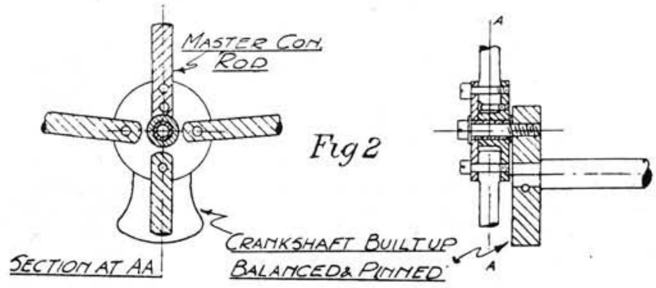

Showing Arrangement of Connecting-Rods to Crankshaft.

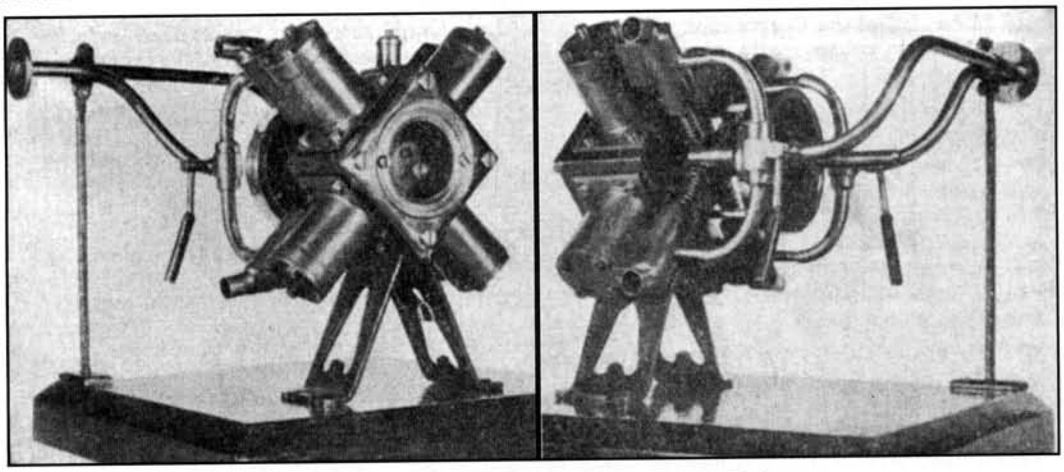

Two Views of the Model 4-Cylinder Radial Type Steam Engine.

Lubrication is by "drip"- the feed being arranged from the top of the crankcase; thus the oil is whirled off the crank discs thereby supplying the pistons, gudgeon-pins and other internal moving components, whilst a drain pipe is provided in the bottom of the crankcase for removing superfluous oil.

The steam feed pipes are arranged with cocks so that the cylinders may be controlled in pairs.

It will be noticed from the photographs that the crank-chamber is provided with an inspection cover, into which is fitted a circular mica disc; this adds considerably to the appearance of the engine. In conclusion, it may be mentioned that the steam used is by no means excessive and the revolutions are such that may it be regarded as a high-speed engine; the weight of the complete model, which is not cut to any great extent, is 3 lbs, 5 ozs., and this could be greatly reduced if necessary by using aluminium for a number of the parts should it be desired.

Some Details in Beam Engine Practice

One of the secrets of good freelance models is to make the proportions and details appropriate to the period you are trying to represent. The following article is typical of many that have appeared in the Model Engineer of the years.

Parallel Motion.

THE question has arisen whether in the actual design of beam engines fitted with the different types of parallel motion it was usual to vary the proportions of the back and main links. To some extent this depends upon the type of parallel motion fitted. Fundamentally, all parallel motions follow one rule very nearly, and that is that the main and back links are the same length in extreme centres, having a radius rod headed on to the extreme bottom of back link, and of a length of throw equal to the radial distance the top of back link is from the beam centre. The main crosshead is pivoted at the extreme bottom of main link, and any air pump, or tappet rod pivot, on the back link lies on a radial line drawn from the main crosshead centre to the beam centre. Generally this pivot centre on the back link comes midway of its length, and the pivot point of the radius rod is in such a position that when the beam is horizontal the radius rod is parallel with it. Out of sixteen well-known examples of old beam engines, culled from such authorities as Tredgold, Farey, Bourne, and Rigg, it is found that the three types of parallel motion occur as follows: That, wherein both back and main links are made strapped, as in Fig. 1, with the main link, one long strap, the back link a half-length strap extended by a bar, and with an air pump or tappet rod pivot at the bottom of half-strap, eight of the sixteen engines are thus fitted, and, in all cases but one, the back link is made lighter in the varying proportions of width of 3 to 5, 5 to 8, up to 9 to 10. One engine attributed to Boulton & Watt thus constructed has equal width straps and equal diameter pins. That in the figure, which is drawn to scale proportion, is taken from Tredgold, and represents the motion on a 45 h.p. rotary beam engine designed and made by William Fairbairn. The accompanying perspective sketch, copied by photography from Bourne, shows similar practice by Caird & Co., and indicates that, in this case, though the widths of straps and pins vary, the thicknesses are much the same. Drawings, however, of a Caird engine in the same treatise indicate that the strap thicknesses vary back to main as 7 to 10 and the widths as 7 to 11. In the sixteen examples taken, five have a strap main link and a bar only for the back link, as indicated in Fig. 3. This shows the parallel link work on a small 6 h.p. beam engine by Fenton Murray & Wood, of Leeds, having no air pump, or other drive, off the back link, and is culled from Farey's book. Three out of the five, two by Watt and one by Harvey, of Hayle, have eyelets in the back bar link for air pump and tappet rod drive, while another small engine, as Fig. 3, is non-condensing, was constructed by I. A. Blyth, of London, and is illustrated in Bourne's book. Three engines of the sixteen have full-length strap links, as indicated in Fig. 4, which is taken from Tredgold, and shows the links and pins of equal size.

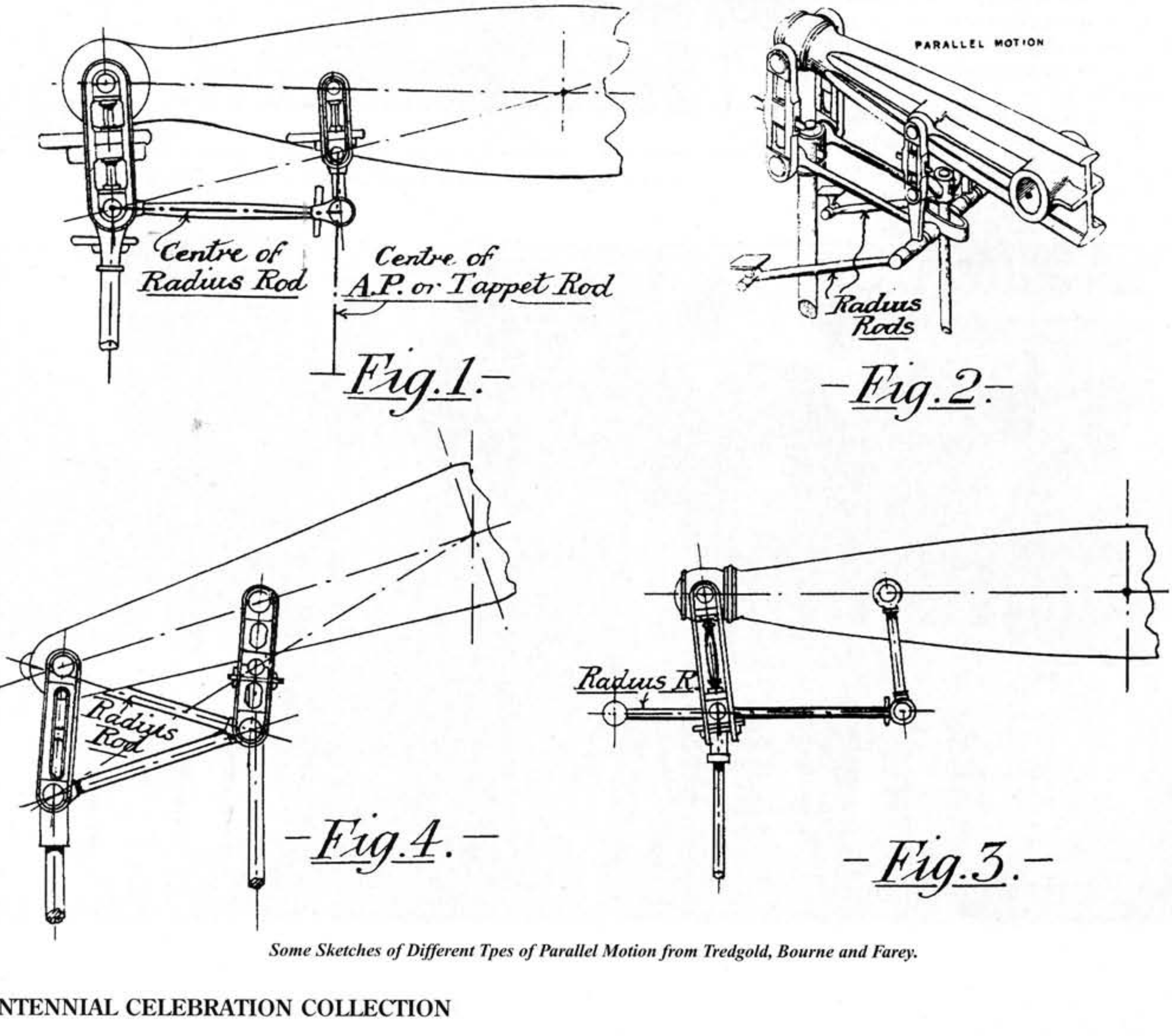

Some Sketches of Different Tpes of Parallel Motion from Tredgold, Bourne and Farey.

Model Engineering in West Africa.

New Triple Expansion Engine Sets now Available.

THE educational value of model engineering is fully recognised at the Technical School at Accra, West Africa. Here is a photograph of a fine model triple-expansion marine engine, designed by Mr. T. W. Perrett, the headmaster, and recently built in the school workshops by the third-year students. Our second picture shows the students grouped round the completed model, which is appropriately supported by the Union Jack.

The model is built to the scale of 1 in. to 1 ft., the diameters of the cylinders being H.P. $1\frac{9}{16}$th ins., I.P. $2\frac{5}{8}$ ins., and L.P. $4\frac{7}{16}$th ins., while the stroke is $2\frac{3}{4}$ ins. The H.P valve chest is fitted with a brass liner. The crankshaft is turned from a bar of mild steel while the eccentric sheaves are also made of the same metal. The engine is fitted with all round reversing gear. The model is $18\frac{3}{4}$ ins. high, the length is 18 ins., and the width 11 ins. The castings, which weigh about 160 lbs., are made in a soft grey iron which is easily machined, and the non-ferrous parts in a good quality phosphor bronze.

The castings and materials for this model were supplied by the Liverpool Castings and Tool Supply Co., Ltd., 41, South Castle Street, Liverpool, to the order of the Crown Agents for the Colonies. The Liverpool Castings and Tool Supply Co., Ltd., will be pleased to quote any of our readers for castings for this very fine marine engineering model.

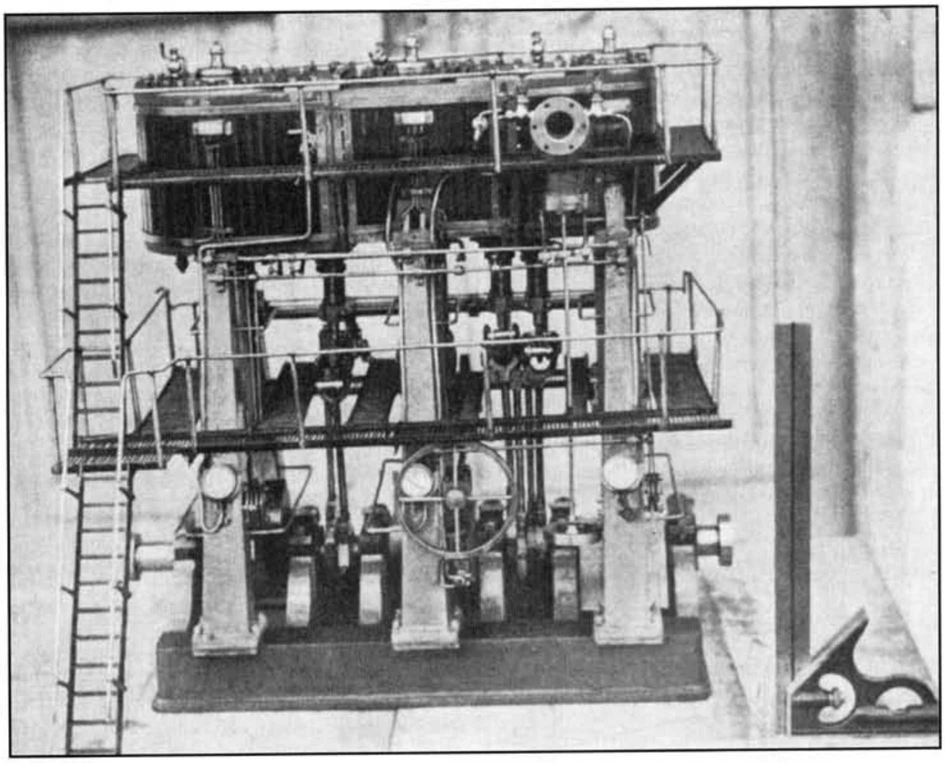

The Triple Expansion Engine built at the Technical School at Accra, West Africa.

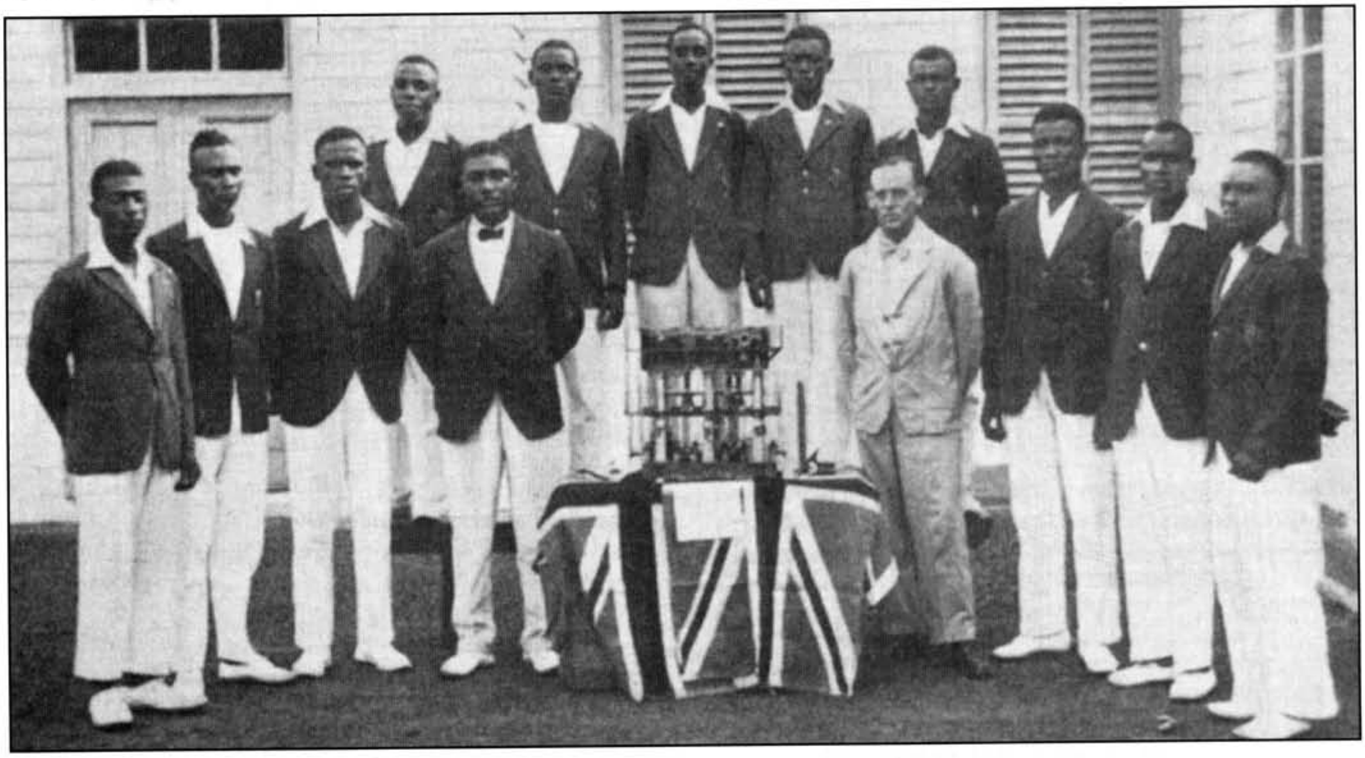

Some of the students and their job.

October 17, 1929

The "Model Engineer" Exhibition of 1929.

The Championship Cup Model.

Model Oscillating Paddle Engines.

By W. T. Barker, R.N., S.M.E.E.

Another of Lieut. Com. W. T. Barker's superb models and well worth close study. Built on the most modest of equipment it would stand scrutiny with any model built today. If including this encourages just one person to visit Liverpool Museum to see the original it will be worthwhile.

Mr. Marshall has asked me to write some account of the model with which I have been fortunate enough to win the Championship Cup at this year's Exhibition, and I must preface it by saying that when my many good friends at the London Society of Model Engineers were urging me to enter it in the competition, I thought they were only offering optimistic encouragement in venturing to predict the possibility of such a result and even now that they have in a way proved their case and earned my thanks, I still feel that it has been my luck this year not to be pitted against some of the real talents of our confraternity whose work is known to and admired by us all.

I think that the main reason inducing me to build this engine was the idea of having a companion model to a set of side-lever engines I finished some years ago. Marine engineering was my occupation for a good many years and I have always had a particular interest in and admiration for those wonderful old examples of engineering belonging to a bygone era that seem almost antediluvian in these days of high-pressure turbines and Diesel motor ships, though hardly yet separated from us by an average lifetime.

The Winner of the Championship Cup, Lieut. W. T. Barker, R N

Loving early type marine engines as I do, and already possessing a model of the earliest standard form, what more natural than that I should decide to provide myself with an example, disregarding freaks, of the next stage of evolution.

The model illustrated in the photographs make no pretence at being a scale production of any prototype. It has been very much amplified in details and is intended to give a good general idea of the appearance and outstanding features of the type of oscillating-cylinder jet-condensing paddle engines commonly used in sea-going ships of the mercantile marine in the 'fifties and 'sixties of last century. The principal dimensions are as follows:-

Cylinders, 1 7/8-in. bore by 1 7/8-in. stroke.
Slide valves (two per cylinder), 1/4-in. travel.
Air pumps, 1 1/8-in. bore by 3/4-in. stroke.
Feed and bilge pumps (two of each), 5/16th-in. bore by 7/16th-in. stroke.
Crankshaft, 7/16th-in. diameter.
Paddle wheels, 9 ins. diameter.

Comparatively few castings have been used. They comprise: shaft brackets and outer trunnion bearers

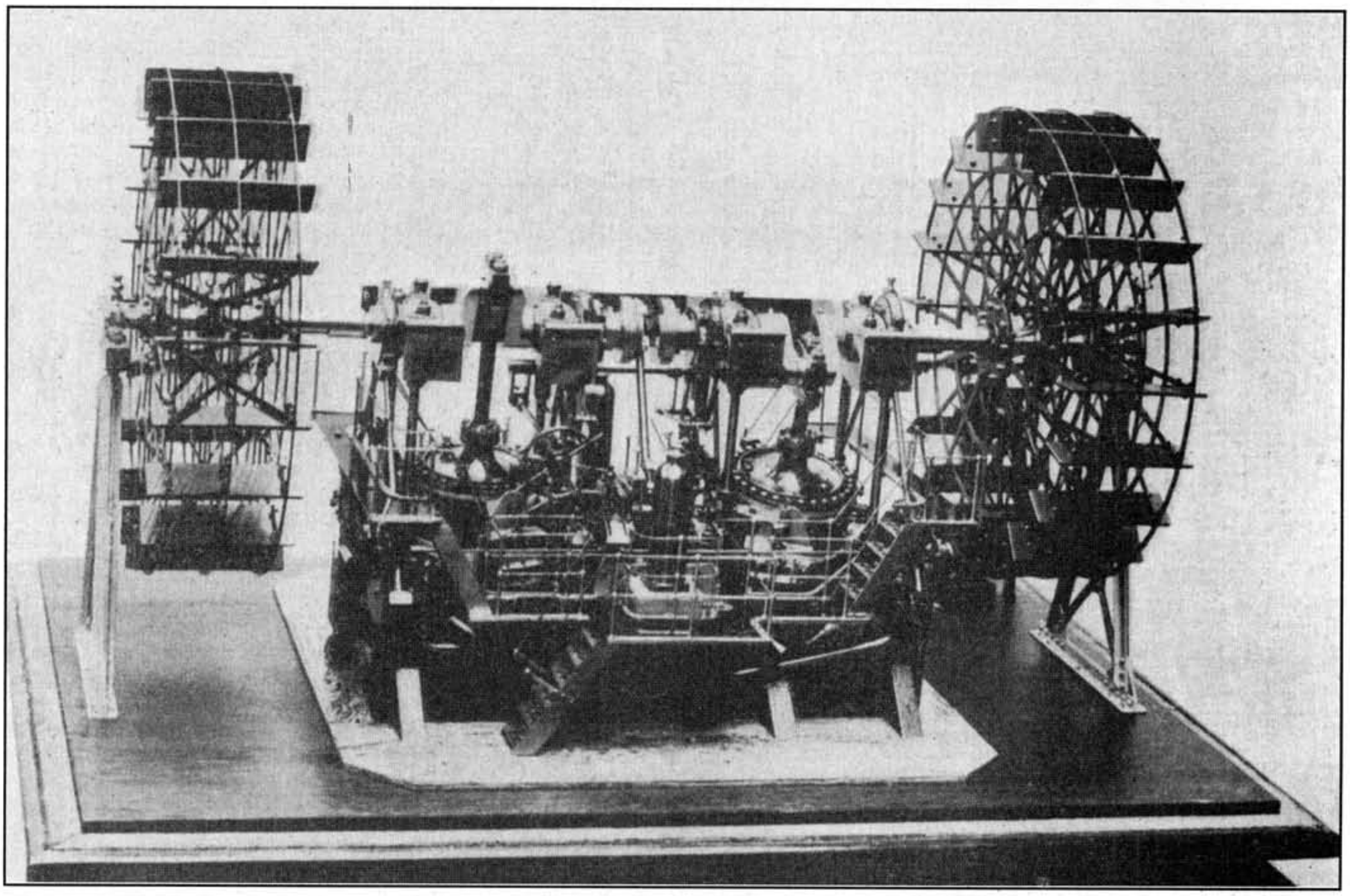

Model Oscillating Paddle Engines: After End of Engines Looking Forward.

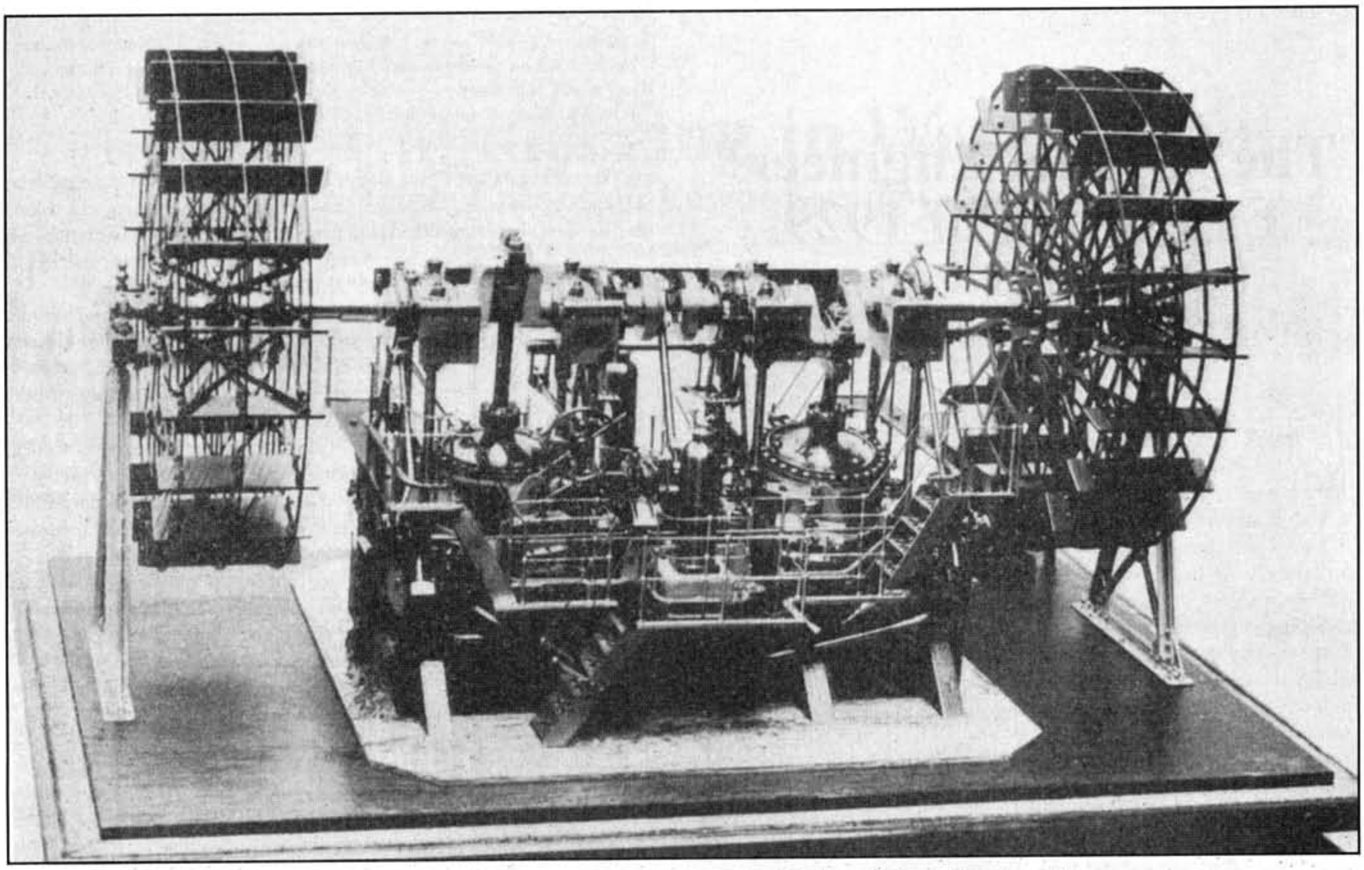

Model Oscillating Paddle Engines. View of Forward End of Engine, with Frame Plate Removed.

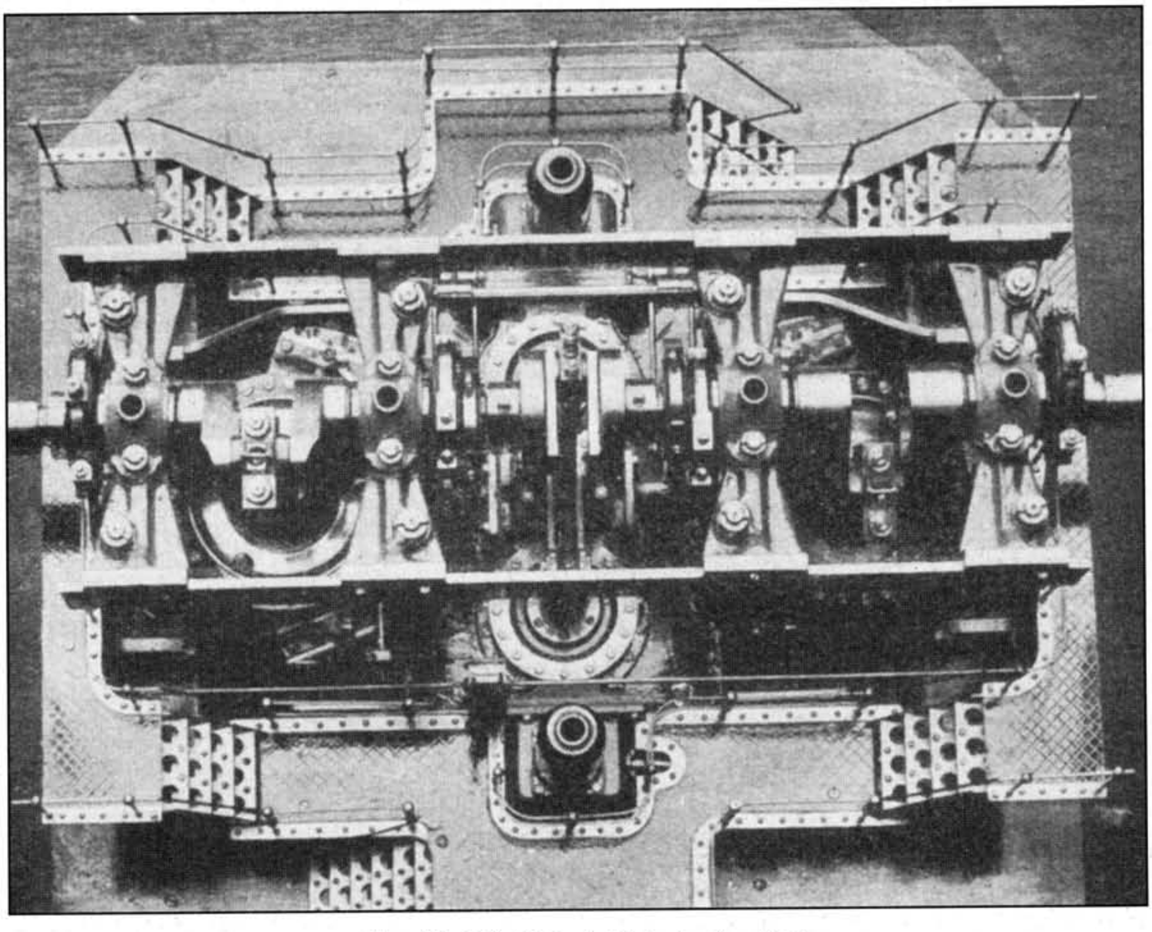

View of Model Oscillating Paddle Engines from Above.

with their caps in iron; cylinders with covers and valve chests; air pump heads and covers; hot wells; feed pump bodies; paddle-wheel centres; and crankshaft brasses in gunmetal. All the rest is made of sheet, rod or bar material, and the only parts purchased ready made were a few wood screws and the two gross or so of 12 B.A. nuts used in constructing the paddle wheels.

Making slide-valve operated oscillating cylinders is an interesting and rather intricate job. Steam admission is by way of the outboard trunnions to an annular passage connecting with the valve chests. In a full-size job the cored steam and exhaust ways are quite complicated. In the model I have simplified matters by using one valve for steam admission only and the other for exhaust. Exhaust passes out through the inboard trunnions to the jet condenser situated between the two cylinders.

Link motion reversing valve gear is fitted. This was not very usual on this type of marine engine. Gab-motion with a single slip eccentric entailing hand operation of slide valves to reverse engines was more common, I believe, in any but very large and heavy units. I found, as a matter of fact, the obliquity errors introduced by the very short eccentric rods necessitated by this link motion a great trial when setting the valves, and in the end I had to compromise a bit and alter the cut-offs I had intended, and consequently the model will not run well when much linked up, which shows the unwisdom of designing fancy valve gear without troubling to work out a valve diagram first.

For those who may find it difficult to comprehend how the motion can be transferred to a pair of oscillating valve chests, I would add that the connection between them is indirect. The eccentric rod operates a quadrant plate which moves up and down in guides fixed to the central columns. This quadrant plate carries a curved slot of a radius struck from the trunnion centre or approximately. The valve spindles are driven by rocker arms whose outer ends engage in this slot and so the motion of the eccentric is transmitted to them regardless of the varying position of the cylinder.

The shaft bearers are carried upon eight turned columns rising from the base portion of the engine structure; and in the construction of an engine of this type great care is necessary to ensure that the crankshaft and trunnion bearings are parallel and in alignment with one another and also, of course, that the trunnions on the cylinders themselves are exactly at right angles to and central with the bore.

The paddle and crankshafts are built up in a somewhat unusual way for a model (no brazing or pinning being resorted to), of nine separate pieces, excluding eccentric sheaves; and as the completed shaft was too long to swing in the centres of my lathe I had to rely entirely on close machining of the various sections, to ensure the final result running true when tested on vee-blocks, which it did I was glad to find to within about 2 "thou."

The accompanying sketches show one section of the crankshaft with its crank webs and pin in one piece, and indicate clearly the method of building up by swelling the shaft end into internal tapered holes in the crank bosses.

Making the paddle wheels was, I think the most tedious job on the whole model; they occupied my spare time for about five months out of the three and a half years spent on the whole engine. They are 9 ins. in diameter, and the six frames, three to each wheel, are cut out of discs of 20-gauge sheet brass, all the lattice work being produced by careful, almost endless work with piercing saw and file. There are twenty diagonal stays to each wheel bracing the frames together to make which a special forming and drilling jig had to be made. Although the material is so thin and light, the wheels are extraordinarily strong and stiff when braced up. Each has twenty fixed floats made of wood, 2¾ ins. by ¾ in. by ⅟₁₆th in. thick, each secured to the framing by six No. 12 B.A. brass hook bolts with nuts and square washers.

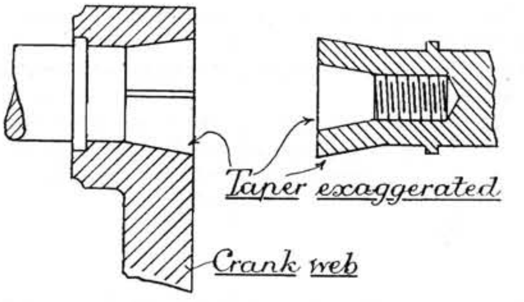

Sketch, with an Exaggerated Taper, showing Method of Fitting Crank into Crank Bosses.

The model is finished off with platforms, ladders and handrails of German silver. The unpolished portions are painted mainly French grey, except inside the framing, which is a deep orange colour, whilst the recessing of crankhead brasses and eccentric straps, paddle floats and a few other minor parts are picked out in scarlet.

In the illustrations, one of the feed pumps is just visible on the right of the photo-under the port-wing gangway; and the bilge pump under the starboard one on the left. The short stroke midship crank drives the twin air pumps by a rocking lever. In front of them is the forward hot well with the air discharge cone upon it.

It is perhaps hardly necessary to say that I have never tried the engine under steam nor intend to, but it runs well in either direction on about 10 lbs. air pressure.

All the turning required was done on a 2½-in. centre Adams treadle lathe. Other machines used being a small milling machine and a hand planer.

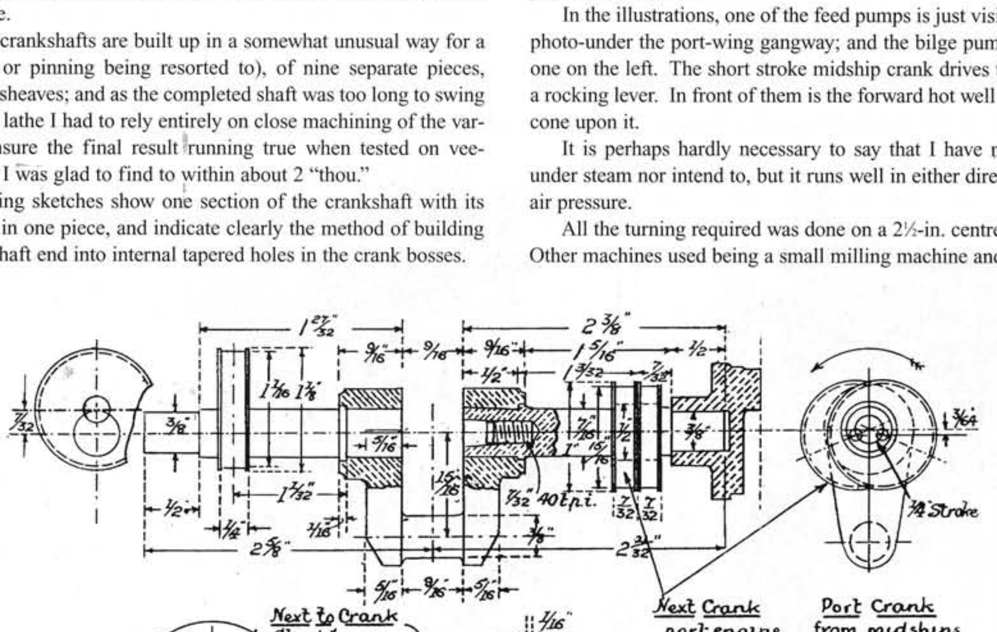

Dimension Sketch showing one Section of the Built-up Crankshaft.

October 17, 1929

Ageing of Gauge Glasses.

Dear Sir, - Do gauge glasses deteriorate with age? I ask this because I have recently bought a steam plant, made by a firm of the very highest standing, and amongst the spares was a batch of water-gauge glasses. The plant is about twenty years old, but had had hardly any use, and the spare glasses, of course, none.

Nevertheless, these burst at 125 lbs, pressure, one after the other, although the working pressure of the plant is 250 lbs.

The water gauge is correctly aligned and I have had no trouble with a new glass. - Yours faithfully,

H. L. Philips.

August 15, 1935

A Launch Engine with Baker Valve Gear.

By F. Pomeroy.

Here is an unusual engine using Baker valve gear. Developed in America for use on railway locomotives, I cannot recollect ever seeing it fitted to a full size stationary engine. Perhaps we shall see a number of such engines entered into the Model Engineer Exhibition?

THIS is a description of a rather unusual combination, a marine engine with a locomotive valve gear (most of my designs are unusual). How it came to be made was thus. I had been grieving over the very slow port opening given by a single eccentric as fitted to most model marine engines, especially if there is much lap on the valve, and envying the snappy port opening of the radial gears. After puzzling out various weird and wonderful ways of getting over this, I was suddenly struck by the fact that if you want the good steam distribution of a radial gear, the simplest and most obvious way of obtaining it is to fit one. (Funny, isn't it, what a lot of extra thought laziness costs one?)

Well, no sooner said than done. No, not quite as quickly as that perhaps, but it was done. A glance at the photos may conjure up visions of large drawing boards, squares, slide rules, and such, but I am pleased to say that the engine was built without once laying pencil to paper. I always design experimental engines from the top and build downwards, so the bore and stroke being decided on, patterns were made, and two cast iron castings obtained for the cylinder and trunk guide. The bore and stroke are 5/16" x 3/4". The piston is also of cast iron, and fitted with two light cast iron rings, steam is distributed by a 3/8" dia. piston valve, exhausting through the centre. This is also C.I. The ports were cut by a specially made cutter, as described by "L.B.S.C.", to whose plain and practical articles I am indebted for my knowledge of the gear employed. When the cylinder and guide were completed, they were put together. As I couldn't quite decide at this point whether I could use four columns or only three, I made the gear next. After putting all the radial gears through the third degree, the Baker gear was the only one that emerged as being satisfactory for high revolutions. Walschaerts and all other gears I am acquainted with are definitely not "revving" gears, but the Baker seemed ideal. "L.B.S.C.'s" "O" gauge seemed to be too small, and the 2½" gauge too large, so I concocted one of my own by taking the dimensions off the full-sized gear, as described in the maker's handbook, kindly lent me by a friend, using 1/32"s. instead of inches. They happened to be all round figures, except the gear frame centres, which were 10 15/16" and 15 3/8" full size. They were made 11/32" and 31/64" in the model and the other centres worked out as shown. By the way, in the handbook of the full size gear, there are two designs given, one for inside admission valves, and the other for outside; but every model loco I've seen uses the inside admission type for an outside admission valve. There seem to be few piston valve jobs about. I have studied the full size handbook pretty closely, but can't see what the idea of using two types of gear is, nor why all model engineers use the inside admission gear for a slide valve. Perhaps someone can enlighten me.

All the gear plates are 1/16" steel, as it happened to be the only stuff I had, and the pins are 3/32". The frames are 1/16th" steel, bushed. I took a few liberties with the construction, by not bending the radius bars, but leaving them straight, just relieving the sides for clearance, so that it looks as shown in the drawing. The clearance is exaggerated. When this was done, it was held up to the cylinder and guide, and three columns seemed to be the best way of supporting them. One of the columns is filed in half, and the gear frame bolted to it, while the other side of the gear frame is anchored to the soleplate. To reduce the somewhat lanky appearance of the engine, the bearings are bolted to the underside of the latter. They are very long. The crankshaft is 7/32" dia., built up, with a hefty balance weight bolted to the crank disc.

The connecting rod is also unusual. It is a sort of articulated one, with a half universal joint at the big end. The drawing shows the construction. The other half of the universal joint is provided by the circular cross head. This type of rod corrects all those annoying errors of alignment which are apt to creep in, even when the greatest care is taken, and

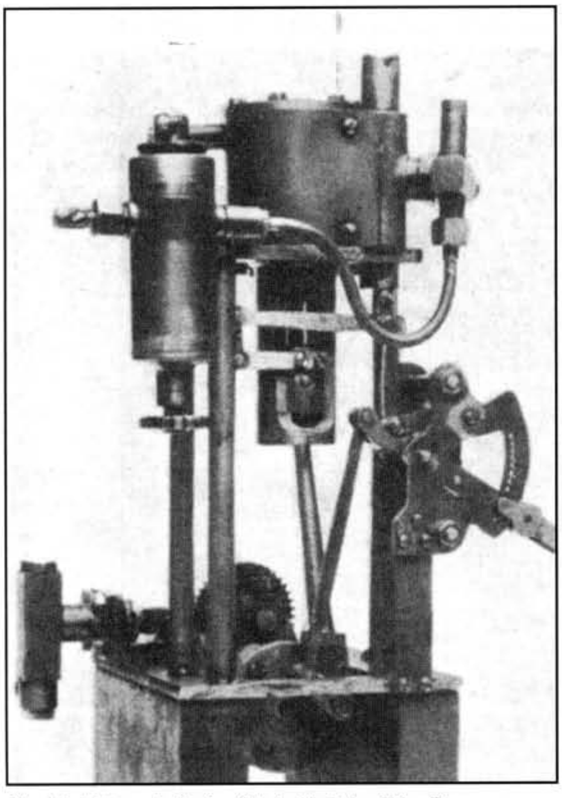

The Model Launch Engine fitted with Baker Valve Gear.

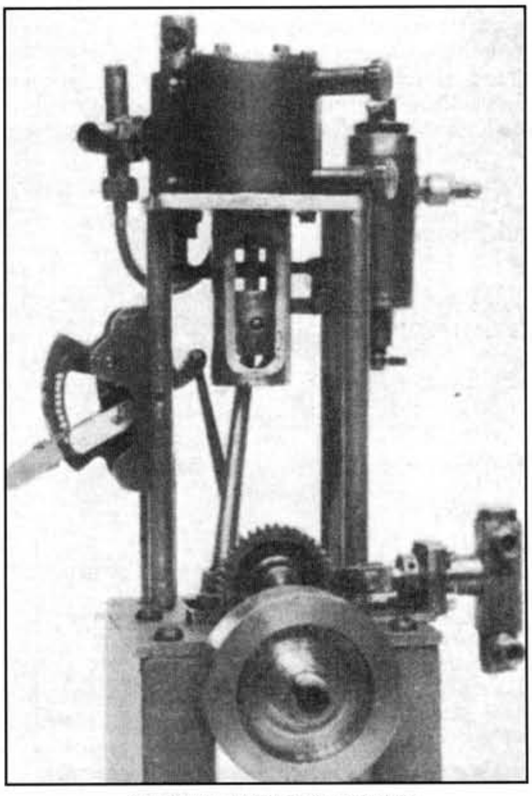

A view from the opposite end of the Model Launch Engine.

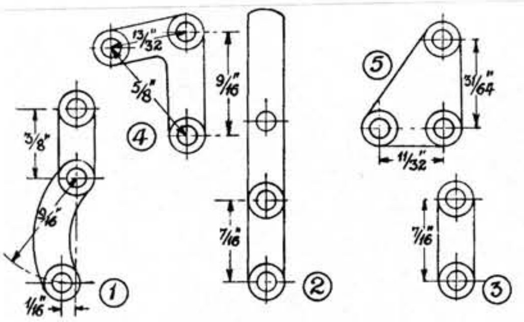

Details of the Baker Gear.

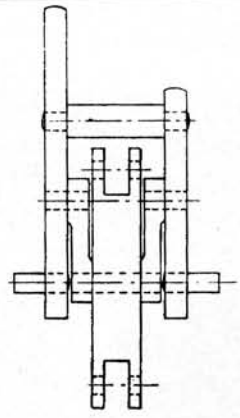

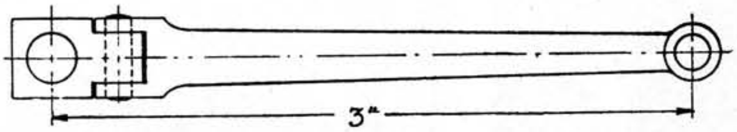

The Connecting Rod.

enable the big and little end pins to be fitted quite tightly, and yet have the engine turn quite freely without any tight places. When fitted thus, they will run almost indefinitely without showing signs of wear. I'm afraid "L.B.S.C.'s" "Inspector Meticulous" would not approve. I expect he would say: "Nonsense! The man's got a lathe and he calls himself a mechanic; if he makes the parts accurately, it will all fall together without any of this messing about."

The engine was put together and the gear rods made and centres obtained exactly as described by "L.B.S.C." The return crank is a tight push fit, and is only clamped by a 1/16" bolt. It is not pinned. Also, when the engine was completed it was run for some time with the valve cross head merely pushed tightly on the spindle and not pinned. It has been pinned since, but I think this demonstrates very forcibly the absence of friction of the piston valve. I imagine things would have shifted if it had been a slide valve.

I had rather a puzzling half-hour after I had put things together to mark out the quadrant holes, as, when re-erecting it again permanently, I replaced the return crank at the opposite quarter and wondered what the Battle of Waterloo was the matter. Try it on your loco.

As the boiler which will drive this engine is also an unusual type for a boat and has a very small water capacity, I added a mechanical feed pump. This can be seen in the photos. It is 5/16" bore x 1/4" stroke geared down 2 to 1 by Meccano gears. They are carefully meshed, and run quite quietly; the little pump, in all the tests that have been made so far, seems quite capable of maintaining a full pot. As to the performance, I wanted to get a nice long valve travel, but found I could only obtain 5/32". However, the engine pulls, well, "like a steam engine"! So far, it has only been tried in the bath, but later I hope to obtain a photo of the boat in action and describe the boiler. In the bath, if you reverse suddenly, you've got to hold the boat pretty tightly with 60 lbs. pressure. The engine will run ahead or astern when linked up one hole either side of mid gear, and the holes are spaced as closely as possible. In general, I am very well satisfied, and when the boat is definitely completed I shall take the liberty of christening it "Baker 1st." In conclusion, a reverse gear on a single cylinder engine is really not worth fitting, and the only object in doing so was to see what results would be obtained with a good quick-acting valve gear, and to decide the earliest efficient point of cut-off. I haven't fixed this yet, but when I do, I'll let readers of the M.E. know about it.

August 29, 1935

Packing Glands on Model Engines.

I HAVE found in packing model glands that instead of having the packing in a long length, and threading it to and fro round the rod, it is much better to wind the packing round a piece of brass wire the size of rod being packed, and with an old safety razor blade, cut through packing parallel with rod. There is now a series of small rings of packing which are easily placed in stuffing box with a pair of tweezers. Push packing into box with piece of bent wire, of course, keeping joints in packing opposite each other, or, as we say in big work, break joints. C.H.C.

January 16, 1936

Firebars for Model Locos

Dear Sir, - With reference to the recent correspondence on the above subject, a friend of mine made up a grate from worn-out three-cornered files. They have been in service on a 2½" gauge loco. for nearly a year, and have proved successful.

Yours faithfully,
J.M.Proud Hull.

August 22, 1935

On page 51 I featured a model of a side lever paddle engine by W. R. Barker R.N. and I am sure you will agree that it is a superb model. Being the perfectionist that he was he spent eighteen months rebuilding and perfecting although when you read his article he seems to have built a completely new model.

The Reconstruction of a Model Side-Lever Marine Engine.

By W. T. Barker, R.N., S.M.E.E.

THE model referred to below was first described in the Model Engineer, of 1st January, 1925, but during the last two years has been so considerably rebuilt that views showing its present appearance may interest those readers, who seem to be on the increase, if the correspondence columns are any guide, who are fond of the earlier types of steam engine.

History.

For the benefit of those unfamiliar with the practice of the early days of steam navigation, it will, perhaps, be useful to insert a few remarks upon this long-vanished type. The side-lever engine was the first to come into more or less general use for operating the paddle wheels universally employed at that era for ship propulsion. It was, of course, just an inversion of the ordinary land beam engine, with the motion placed below instead of above the crank shaft, an arrangement which necessitated duplicating the beam. In the United States of America, however, for shallow draught steamers on the great lakes and rivers, overhead or "walking" beam engines, as they were occasionally called, some of them of enormous size, were in use down to comparatively recent times.

Owing to their great weight and bulk for the power developed, indirect-

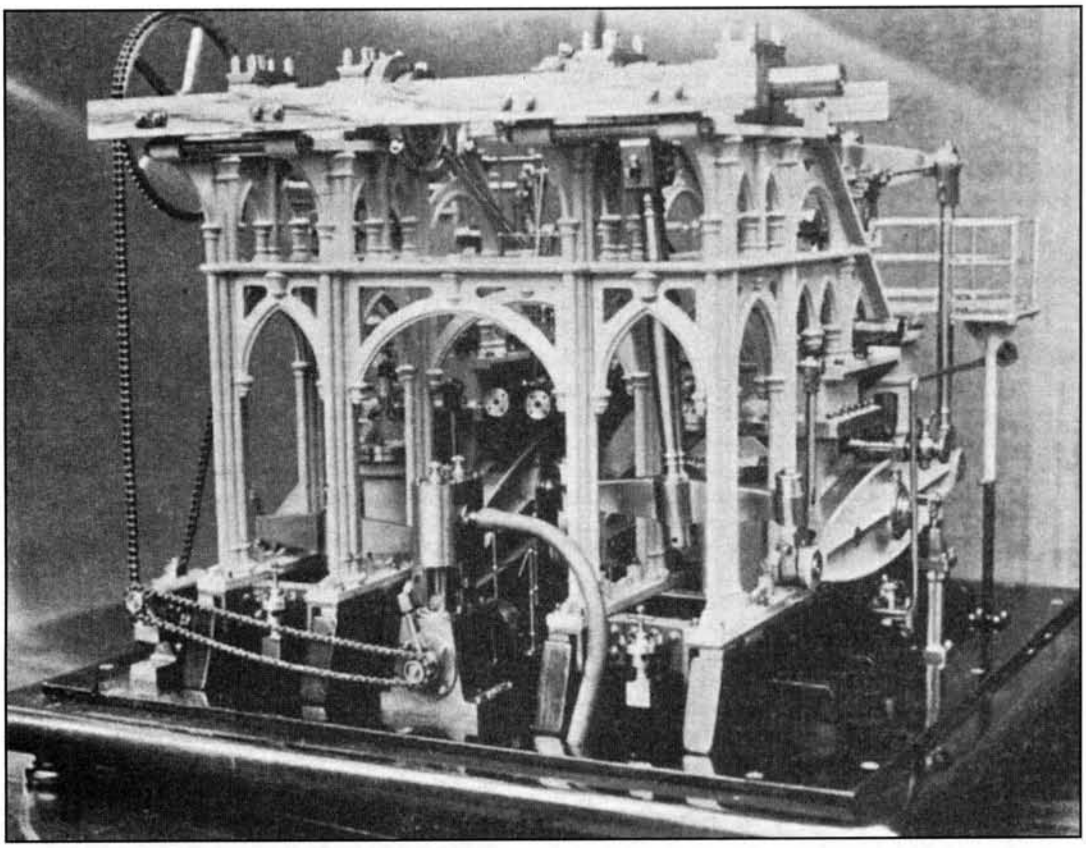

A general view of the model side-lever marine engine.

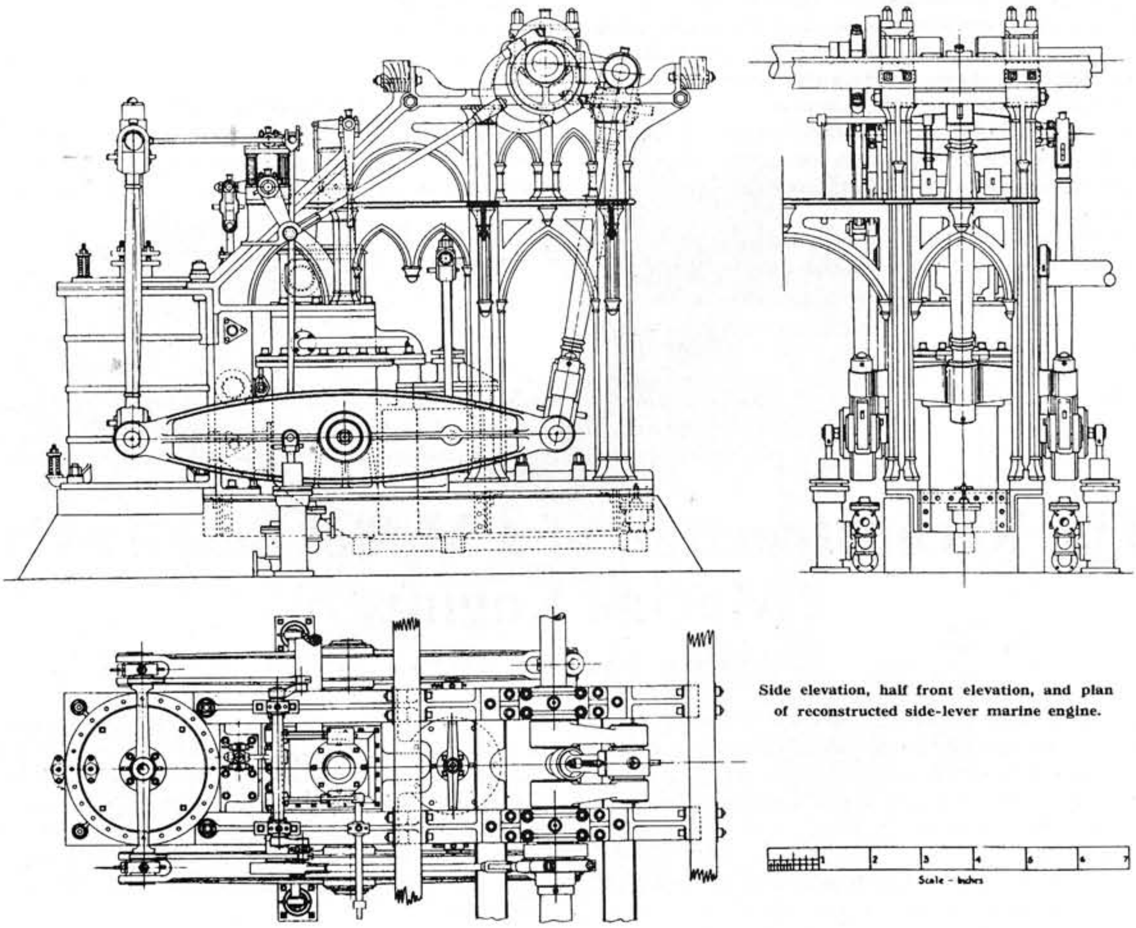

Side elevation, half front elevation, and plan of reconstructed side-lever marine engine.

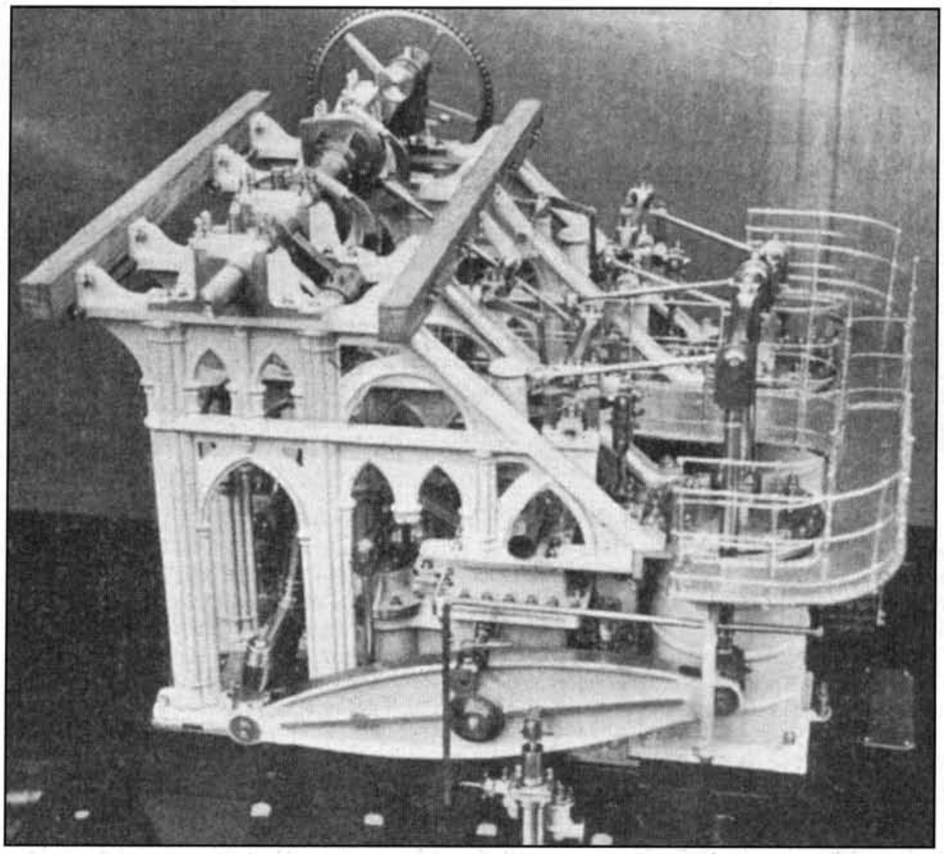

Another General view of engine, showing side lever, cylinder and parallel motion arrangement.

acting beam engines of the side-lever type were really unsuitable for marine purposes, and though they were reliable and reasonably efficient machines for those days, and were in pretty general use in one form or another during the first 30 years of the age of steam navigation, many attempts were made to supersede them by various kinds of direct-acting engines, culminating in the oscillating cylinder type, until the screw propeller displaced the paddle wheel for sea going ships.

Side-lever engines were suited only for low steam pressures of about 4 to 8 lbs. per sq. in., and worked at slow speeds of some 12 to 16 r.p.m. on an average. Jet condensing was almost universal, and salt water was used in the boilers, the density being kept down by frequent brining to about three times the saltness of sea water.

The Rebuilt Model.

The reasons for undertaking this rebuild were to a great extent accidental. The original model, though a handsome ornament, was not really much more. It was too free-lance an affair, and many of its details did not altogether please me. Even now it is still rather a hybrid. It could never be mistaken by an expert for a scale model of any particular prototype, but its general ensemble, proportions and much detail are now very much closer to what was the orthodox practice of the middle thirties of the last century.

New Frame Patterns.

In the course of a discussion of some of the model's shortcomings which took place with some fellow members of the S.M.E.E. during The Model Engineer Exhibition of 1933, one of them, Mr. J. L. Thorp, very kindly offered to make a new and more classically correct pattern for the main frames, and from this suggestion, the idea of reconstructing the model was born.

It was Mr. Thorp's skill as an architectural modeller, to say nothing of the patience and careful attention to detail required, which produced the beautiful work of art shown in the photograph accompanying these notes, to replace the rather crude approximation of my own earlier attempt in this direction, which made the rebuilding of the model a practical proposition at all.

The model is painted a light grey, necessary to show up the interior portions, which in any darker colour would be hardly visible. As near as one could put a scale to it, it is approximately ½ in. to the foot for a pair of engines having cylinders 60" dia. by 72" stroke, or of some 280 collective nominal horse-power and of date about 1835-1840.

I had intended at first to go further than to fit the new frames, new and rather better proportioned cylinders, and new side levers, but as the job went slowly forward, in my limited spare time, various other components began, as always happens, to look amiss in their new setting, and by successive steps I went on to replace first the crank-shaft by one copied from Tredgold, then the eccentric straps. After that, parallel motion was substituted for the crosshead guides, and crossheads, valve motion, main bearings, hotwells, and several other and minor details were either replaced or improved.

Reconstruction has occupied in all about eighteen months, and although I think I should never have embarked upon it had I foreseen the lengths to which the alteration fever would lead me, I am glad now to possess so much more accurate a presentment of this delightful and interesting early, one might say almost original, type of marine engine than I had before.

I should add, in case anyone comments on it as an anachronism, that the little auxiliary engine seen in the centre of the forward photo, is no part of the model itself. It is a tiny two-cylinder air motor, whose purpose is to drive the model at a low speed through 60 to 1 reduction gearing.

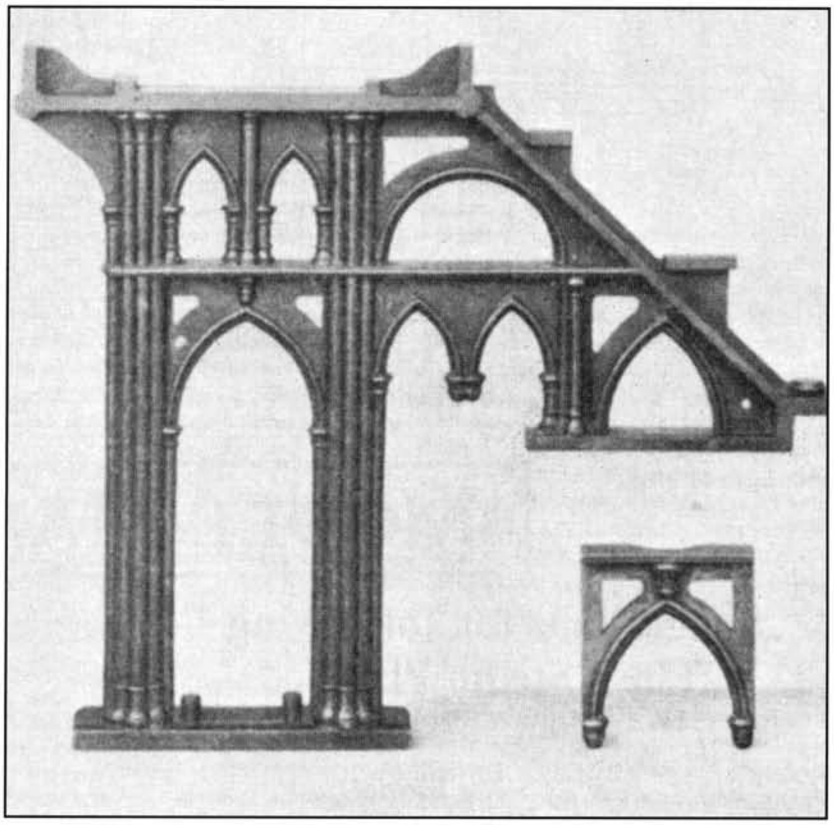

Patterns for new frames by Mr. J. L. Thorp.

September 19, 1935

Some Reminiscences concerning the Engines of the S.S. "Dakota."

By "OLD MILLWRIGHT"

I HAVE been informed that this steamer of the Guion Line was the first to take a large compound engine across the Atlantic. The design does not appear to have been repeated, and it is probable that several of the apparent defects proved to be very real in service. The ratio between the volumes of the H.P. and L.P. cylinders - nearly one to seven - is very high; there would be about 72 cu. ft. of steam in the H.P. cylinder, and this had to be passed into the 482 cu. ft. of the L.P. cylinders. The cut off on the latter could not have exceeded 0.15 per cent if wire drawing was to be avoided. Working backwards from this point, and presuming that the engines meandered round at the usual 38-40 r.p.m., the I.H.P. of the H.P. cylinder would be about 650, and that of the L.P.'s 1,850.

The bed plate, standards, slides and caps appear to be very massive, but these were before the days of cast steel; the connecting and piston rods would pass muster to-day, as far as design alone is concerned, but the bearing surfaces of the L.P. side are very skimpy. There is a pressure of some 275 tons on the crank and crosshead pins, the latter will just pass, but 1,100 lb. per sq. in. on a crank pin is decidedly high; incidentally, there are four cap bolts at each end of this connecting rod. The L.P. bedplate was in four portions, and bolted together fore and aft and thwartships, with four bolts underneath the bearing caps to prevent "working." Corliss valves were fairly common, especially on the H.P. cylinders, but the vertical arrangement on the L.P. cylinders must be unique, and likely to cause trouble owing to end wear.

Instead of the usual links, the air pump rockers were fitted with slides, for there was no space for the former. In addition to the two air pumps, four ram pumps were fitted, perhaps a pair for boiler feed and the others for the bilges; circulating water was supplied by an independent pump or two. Some of these large horizontal cylinders had manholes in the covers, to enable the junk rings to be removed and the springs adjusted; they were not fitted on the S.S. "Dakota," and it must have been no light task to remove a 8-ton cylinder cover in the usual cramped engine room. The L.P. pistons were shod in a generous manner, and perhaps required little attention.

1871 was a trifle too early for mild steel to be used for the piston, connecting and valve rods, or for the crank shaft; the bolts would have been in wrought iron, and forged under a light steam hammer, for the automatic lathe was not then in being. It is unfortunate that no details are available of the reversing gear, the supports for the L.P. valve rod, and the dimensions of the relief valves on the L.P. cylinders; at all events, there would have been plenty of material in the latter.

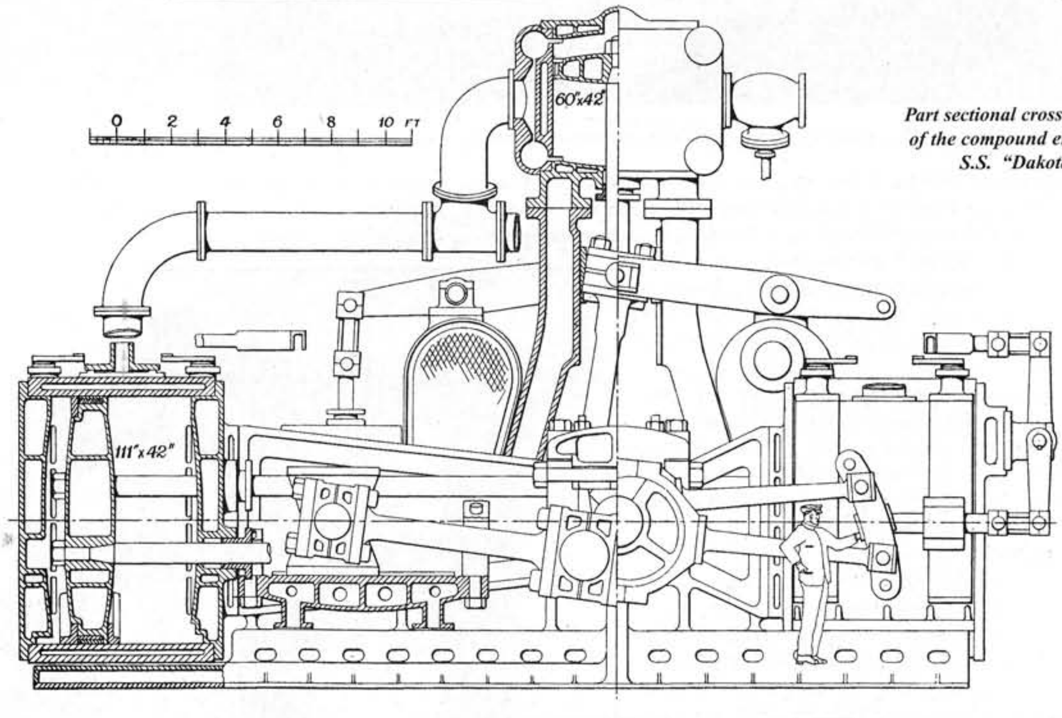

Part sectional cross elevation of the compound engines of S.S. "Dakota".

November 21, 1935

MODEL MARINE NOTES

Suggestions for Improving Flash Steam Plants.

IV. - Temperature Control.

In the 1930's Flash Steam was very popular with the steam boating enthusiast. Edgar T. Westbury, a legendary name in the model engineering hobby, published a series of articles on Flash Steam Plants in 1935. I have only reprinted part 4 to give a flavour and to encourage present day model engineers to look out the rest. With modern day techniques and electronics here is great scope for the experimentally minded.

By Edgar T. Westbury.

IN ALL flash steam boats I have encountered, one of the factors calling for considerable skill, or alternatively, clever guesswork, is the adjustment of the water supply against the available heat so that the steam is delivered at

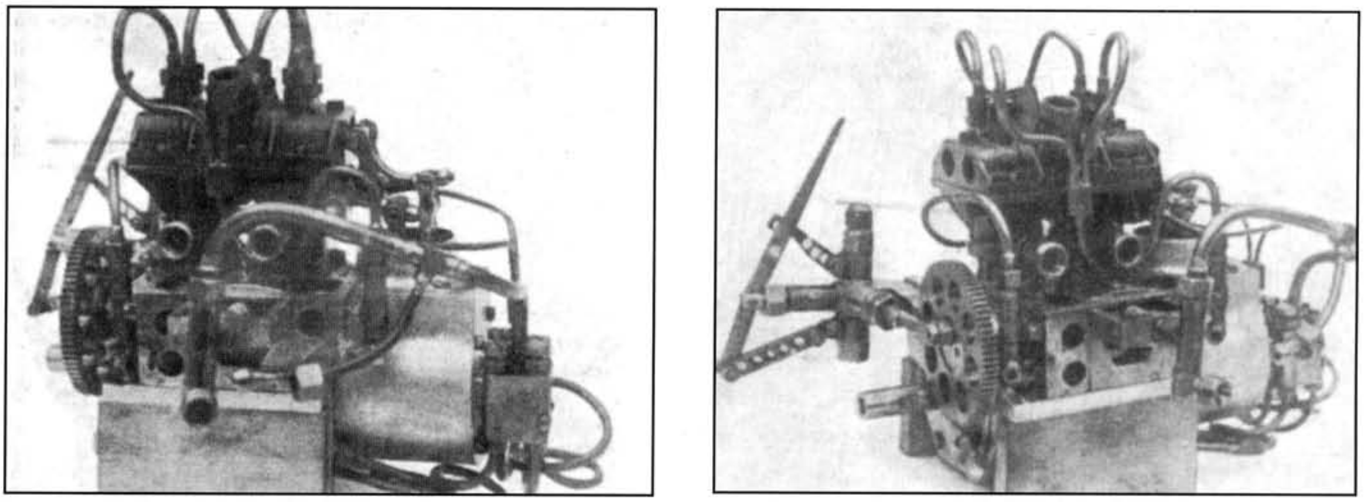

The engine of Mr. A. W. Cockman's "Ifit IV, " showing double piston valve gear, oil pump and distributing valves, and hand-cum-gear driven feed pump.

something like the right temperature. Just what is the right temperature does not seem to be unanimously decided, but there would appear to be quite a good margin between wet steam on the one hand, and destructive super-heat on the other, in which the engine will run reasonably efficiently. Even so, however, many people find it very difficult to keep within these limits.

The logical conclusion is that it would be very desirable to employ some form of thermostatic control which would regulate the water as required; but whereas most people with whom I have discussed the matter agree on this point, they consider it practically impossible to produce a device which will perform this duty, having regard to the limits of space and weight available, and the need to keep the layout fairly simple and robust. And so they prefer to endure this problem as one incapable of a practical solution.

However, there is no doubt that thermal control has been thoroughly successful in steam cars, and personally I have very good reason to believe that a simplified version can be adapted to the purpose we are considering.

There are many types of thermostats, and apart from the thermo-electric type employed in very delicate laboratory work, all those with which I am acquainted operate by virtue of expansion of various substances under the effects of heat. In designing a thermostat for any particular purpose, it is advisable to revert to first principles and consider how the expansion of the particular substance selected can be made to operate a valve or other means of control.

A bar of copper, 10 inches long, if heated from 32 deg. F. to 572 deg. F. will expand about .0565 in., or roughly speaking, a little under 1/16 in. This movement, however, cannot be made directly available to operate the control because, assuming this bar of copper is enclosed in a steam pipe, or mounted on some object which is heated equally and simultaneously, the expansion of the pipe or support will have to be deducted from that of the bar. It is thus necessary to utilise the differential expansion of two substances having as great a variation in expansion coefficients as possible. Also, in most cases, some form of lever to multiply the actual motion is desirable, if mechanical operation of the control is desired.

The Copper-invar Thermostat.

It is well known that the alloy steel known as Invar has a coefficient of expansion so small as to be negligible for all practical purposes. If a bar of this material is used, in conjunction with the copper bar, a very large differential expansion is realised. In Fig. 1 the two metal rods are situated close together, and their points engage a lever kept in contact with them by a spring. Assuming the other ends of the rods to be rigidly fixed, the expansion of the copper rod will be greatly multiplied at the extremity of the lever. To avoid the complication of connecting a thermostat of this type arranged inside the steam space of a boiler to an outside lever, the elements may be made hollow, and the steam passed through them.

A thermostat of essentially similar type to the above, but employing a combination of quartz and nickel elements, is very successfully used in the Doble steam car, but the operation in this case is through the medium of an electrical relay. Such an expedient as the latter would, I think, be very undesirable in a model steam plant, and thus direct mechanical control must be devised if possible.

The Bi-metal Strip.

Straight rods of fairly considerable length are an essential of the thermostat we have just considered, and there is some little doubt as to whether such a device could readily be accommodated in a small boiler. Any attempt to reduce the space occupied by the device would impair its efficiency.

But suppose flat strips of the metal were employed, brazed together throughout the whole of their length; it is clear that differential expansion would take place just the same when the composite strip was heated, but as bodily expansion of one metal without the other would be impossible, the strip would 'warp' or bend into a curve, with the copper on the convex side. The principle is very extensively employed in thermostatic devices, one of the commonest applications being in electric flashing signs. I have not seen one used for steam temperature control, but decided that it would be worth trying for this purpose.

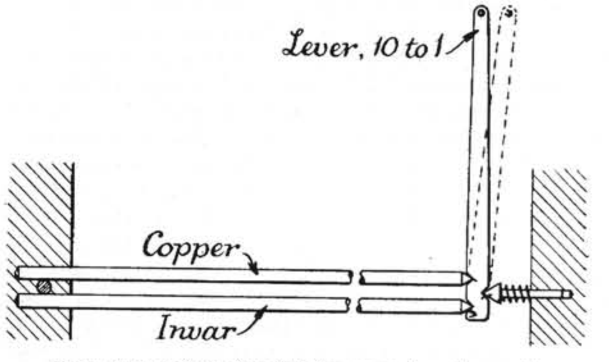

Fig. 1–A simple form of straight bar copper-invar thermostat.

The bi-metal strip can be bent or wound into a coil to multiply the alteration in curvature due to expansion, and thus the free end could be made to turn a screw control valve. Some little difficulty, however, arises in fastening together long strips of dissimilar metals, since the differential expansion comes into play when brazing, causing the strips to cockle up very badly in spite of all precautions. As I was not quite certain how Invar steel reacts to the effect of high temperature, or whether it will braze readily, I used ordinary mild steel in the construction of an experimental thermostat.

It was decided to use the element in the form of a tight spiral, as shown in Fig. 2, and in order to obviate the cockling difficulty, I made bushes or cylinders of copper and steel, the latter a tight fit inside the other. These were coated with boron paste, fitted together, and when heated to the required temperature, there was sufficient space between them for silver solder to run right through the joint. The top edges of the cylinders, by the way, were bevelled to form a countersink with the idea of helping to get the solder to run in.

After cleaning up, the composite cylinder was pressed on a mandrel and screwcut four to the inch by means of a narrow screwcutting tool, until the cut nearly broke through, after which careful work with an Eclipse 4-S tool while still on the mandrel severed it altogether. The result was a tight helical coil,

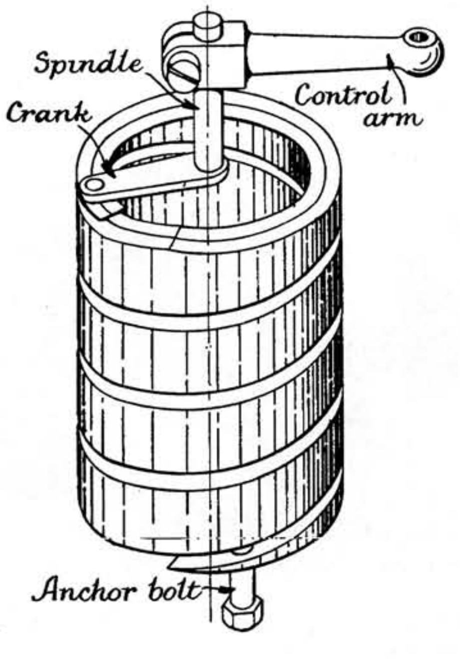

Fig. 2.–A spiral coiled bi-metal strip which gives large amplitude of motion to control lever.

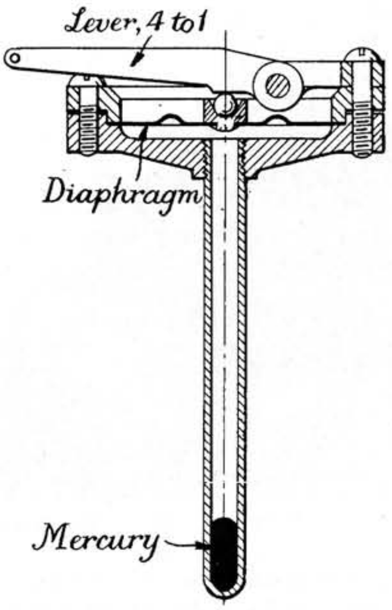

Fig. 3. Liquid thermostat operating over a narrow temperature range.

which was placed inside a tube, one end being anchored by a bolt through the endplate of the tube and the strip, while the other was connected to a radial arm on a spindle pivoted in the other endplate of the tube, as shown in Fig.3, a gland being fitted to the spindle.

When steam was passed through the tube, there was an immediate response on the part of the thermostat, and a pointer attached to the spindle showed that the device constituted quite a reasonably good thermometer. This immediate success almost led me to emulate Archimedes and shout "Eureka !" but unfortunately subsequent experiments indicated some very nasty snags, though not necessarily insurmountable ones. The first is that, although a total movement of about a quarter of a turn on the spindle can be obtained in the full range of temperature, yet in the really useful range, which I assume to be between about 600° to 700° F., the movement was not great enough to be much use for direct control without a relay or multiplying gear. The second difficulty is that when heated to about 700° F. and allowed to cool, the element did not return to it's original position; which meant to say that the elasticity of the metals became partly lost at the high temperature, and the curvature did not remain constant. In practice, this would mean that the control would not operate at the same temperature every time.

It is, however, quite possible that by selecting metals which would retain their elasticity at high temperatures, this fault could be eliminated. There is a very large range of metals to choose from, and my experiment only touched the fringe of the latent possibilities of the idea. A thermostat of this type could be readily built into a chamber which could be utilised as a separator to prevent solid matter being carried over with the steam, or in a steam drum for steadying output pressure. The length of the strip and number of turns should be as large as possible, to obtain the required amplitude of motion at the free end, but the stiffness of the coil must be maintained to avoid accidental deflections, and give a positive action.

A Liquid Thermostat

It has been observed that the metallic type of thermostat operates more or less constantly throughout the entire heat range, but control is only required over a comparatively small range, and it would be much better if this could be arranged. As a matter of fact, one has not far to look for such a principle which can be practically applied.

When water is boiled, it changes from the liquid to the gaseous state, with an enormous increase of volume, but no rise of temperature until evaporation is complete. This phenomenon is common to all liquids, and by utilising the expansion of the fluid through the medium of a diaphragm, piston or Bourdon tube, a very positive control over a very narrow temperature range may be obtained. There is a wide diversity in the boiling points of various liquids, and it is only necessary to select that most suitable for our purpose; if it is impossible to find a liquid which boils at the desired temperature, it is possible to make a compound which will do so.

Incidentally, the most common example of this type of thermostat is found in the good old-fashioned incubator heated by an oil lamp. It consists of a small collapsible vessel containing a few drops of a volatile liquid, the expansion of which, at the critical temperature, operates a damper over the lamp chimney. A similar device is used in electric refrigerating systems for stopping and starting the compressor motor.

Choice of Liquids.

I do not know whether readers are agreed as to what is the best temperature to employ in flash steam plants; I have seen it stated that, for engines to run at their best efficiency, the steam pipe at the receiver connection should glow dull red; but I believe this state of affairs should be regarded as a necessary evil in one particular plant, rather than as a desirable feature. For the present I assume that the temperature previously quoted, 600° to 700° F., should be fairly satisfactory, being based on a steam pressure of 400 lbs. per sq. in. with a moderate working superheat.

Water is of course useless as the fluid for the thermostat we are considering, as its boiling point of 212° F. is far too low, and can only be raised to a very limited state by the addition of salts in solution. Various oils can be selected, which have boiling points anywhere between 200° and 800° F., but it is not advisable to use compound oils, as these contain lighter 'fractions', which distill out and give a false boiling point. On the whole, I am inclined to think that mercury, with a boiling point of 648° F., is the best liquid to use. It should be remembered that the control temperature will always in practice be somewhat higher than the boiling point of the liquid, on account of time lag and other factors.

Only a very small quantity of the liquid is required, and it should be disposed so as to readily conduct the heat from the steam pipe or vessel. I have tried a flat container and a long pipe; the latter seems to give the best result. The example illustrated (Fig. 3) is 3 in. long by $^{5}/_{16}$ in. dia. with $^{1}/_{8}$ in. bore, and has a blind end. The open end is screwed into a flanged cup, to which is attached a flexible steel diaphragm, .015 in. thick, arranged horizontally. When cold, the mercury only occupies about $^{1}/_{3}$ of the length of the tube, so that when expanding it does not raise the pressure on the diaphragm too abruptly.

The tests I have made so far go to show that this thermostat is thoroughly reliable, and will move the diaphragm about 1/8 in. quite forcibly enough to operate a valve. An exact temperature check has not been possible, but from the very nature of this device, I should expect its operation to take place at the same temperature every time.

Method of Control.

In the case of engines having positively driven feed pumps, the delivery might be controlled by means of the bypass in the usual way, with the pump made large enough to deliver water in excess of maximum requirements when the bypass is completely closed. In cases where the temperature of the steam definitely falls below the normal, indicating blow lamp trouble, the thermostat might be made to control the blowlamp nipple. The exact arrangement of control gear must be left to individual requirements, but the main point about the devices considered here is that they are positive enough to operate direct on the controls, without the use of relay mechanism.

The use of a separate steam driven feed pump may be considered undesirable on the grounds of complication, but the scheme has some attractions, and if used, the thermostat could control the steam throttle of the pump direct. As in the previous case, the pump must be capable of delivering more water than is ever required, and there must be no possibility of it ever stopping 'on dead centre' when throttled down.

Time Lag.

In all control devices, a certain interval of time must necessarily elapse between cause and effect, and there is a possibility that in a flash boiler there might be set up a sequence of conditions which would lead to surging. The only way to avoid this is to keep the time lag as small as possible, by arranging that the heat acts as quickly and directly on the element as possible, and that the latter has the minimum inertia, both in the mechanical sense, and in its reaction to increase of temperature.

Another Method of Temperature Control.

If one uses a separate feed pump with its own steam cylinder, there is another, and in some respects, simpler method of control which dispenses with the need for a thermostat.

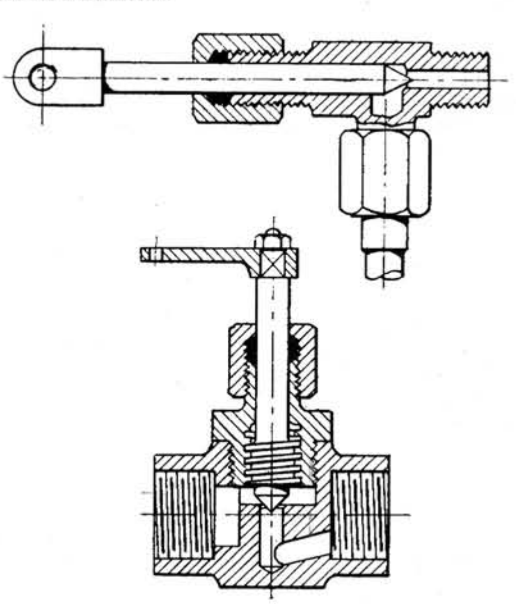

Fig. 4. A direct controlled pin valve, and a quick-thread screw down valve, for thermostat operation.

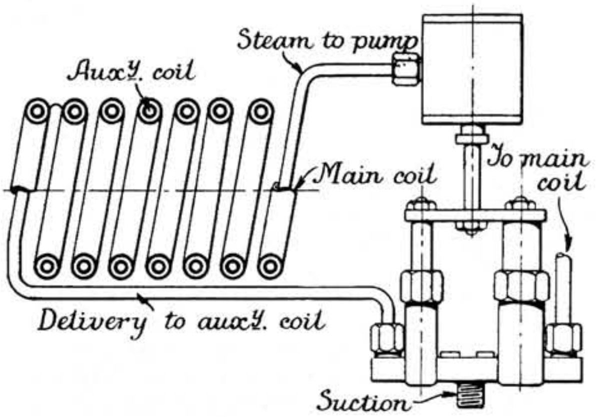

Fig. 5. A seperate feed pump system for maintaining constant temperature.

I have not tried this out, but feel sure that the principle is sound; I fully believed that it was original until I talked it over with another model engineer, and found that he had a precisely similar idea! I will refrain from the obvious remark about "great minds....."

Briefly, the idea is to provide the feed pump with its own boiler, which would consist of a coil of tubing actually inside or in metallic contact with the hot end of the main boiler, and obtaining all its heat from the latter. This auxiliary boiler shown in Fig 5, would also have an independent feed pump, operated from the main feed pump motion, and suitably adjusted to the requirements of the boiler, with no bypass or other device to vary its output.

It will be clear that the hotter the main boiler becomes, the more steam will be generated in the auxiliary boiler, and in consequence, the feed pump will run faster and deliver more water, thus the main boiler temperature will be reduced, and the system becomes self-compensating. The small boiler will also serve the purpose of taking the 'bite' out of highly superheated steam, an expedient very often resorted to in steam car practice.

The additional weight and complication of the auxiliary boiler and donkey pump involved in the use of this system may be considered undesirable, but I do not think it would be too big a price to pay for complete reliability. Experiment would, of course, be required to arrive at the best proportions of the various elements in the system.

There are, no doubt, other methods of thermal control which could be adopted, and I had intended to investigate the matter more deeply before writing on this subject, as my experiments are in no sense complete; but time flies, and some correspondents who wish to get busy on the construction of plants have tackled me for hints on this very vital problem.

While perhaps I have not been able to describe "how to make and fit a simple thermostat" in the literal and simple way that some readers would wish, I have least indicated three distinct methods which promise practical possibilities.

January 9, 1936

Correct Details in Engineering Models.

By R. J. Davey.

THE appearance of a model depends very much on careful attention to detail, and its correctness as to date of prototype. Many otherwise good jobs are spoiled by the addition of parts of detail, quite out of date with the type or period.

The writer has frequently received enquiries as to correct type of such parts as connecting rods, which have probably appeared at sometime in old numbers of this magazine, but are not to hand, or available now. It is to assist these, and many new readers who are probably also interested, that this article is intended.

Simple instructions are also supplied for overcoming the difficult process of slot cutting for cotters. At least, this part of the job appears difficult, but after one or two trials, the cutting of quite small slots becomes quite a simple job. Don't get tired of that engine job, have some other hobby for an occa-

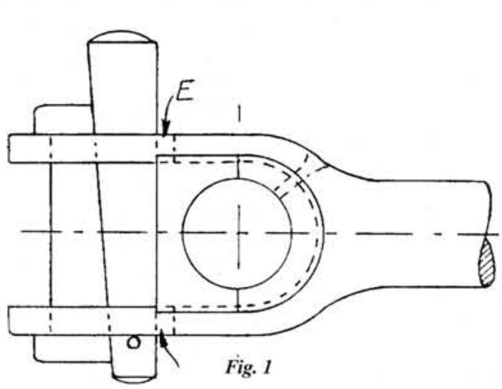

Fig. 1